# Arby's

NEW REMODEL FOR: 2321 N. ARKANSAS AVENUE

RUSSELLVILLE, ARKANSAS

## Sheet Index

### ARCHITECTURAL


G101 SHEET INDEX, CODE INFORMATION, GENERAL NOTES, VICINITY MAP, LEGAL DESCRIPTION

ALTA SURVEY

C101 SITE PLAN, PLAN DETAILS, ACCESSIBLE ROUTE REQUIREMENTS, SIGN DETAIL, GENERAL NOTES

DEMO DEMOLITION PLAN, DEMOTION NOTES

A101 FLOOR PLAN, DOOR SCHEDULE, DOOR NOTES, ADA GUIDELINES FOR DOORS, GENERAL NOTES, ACCESSIBILITY REQUIREMENTS, INTERIOR FINISH NOTES, FIELD VERIFICATION NOTE

A102 REFLECTED CEILING PLAN, LIGHT FIXTURE SCHEDULE, EMERGENCY ILLUMINATION NOTE, GENERAL NOTES, SECTION, FIELD VERIFICATION NOTE

A103 ROOF PLAN, DETALS PARTIAL FRAMING PLAN, GENERAL FRAMING NOTES, DESIGN LOADS

A201 BUILDING ELEVATIONS, EXTERIOR FINISH NOTES, SIGNAGE NOTE, GENERAL NOTES

A202 BUILDING ELEVATION, TYPICAL ACCESSIBLE CLEARANCE REQUIREMENTS


## Code Information

BUILDING CODE REVIEWED:

2012 ARKANSAS FIRE PREVENTION CODE

NOTE TO BUILDING OFFICIAL:
SCOPE OF THIS PROJECT IS LIMITED TO EXTERIOR REMODELING AND NON-STRUCTURAL INTERIOR REMODEL ONLY. THE BUILDING USE AREAS HAVE NOT CHANGED. THE OCCUPANCY HAS BEEN SLIGHTLY REDUCED.

A. OCCUPANCY CLASSIFICATION: ASSEMBLY - GROUP A-2 SECTION 303

B. OCCUPANT LOAD CALCULATIONS: TABLE 1004.1.2

| | SQUARE FOOTAGE | SQUARE FEET PER PERSON | OCCUPANT LOAD |
|---|---|---|---|
| INTERIOR DINING | (actual seating) | | 46 |
| WAITING AREA | 84 | 5 | 17 |
| KITCHEN | 952 | 200 | 5 |
| TOTAL OCCUPANT LOAD FOR EGRESS: | | | 68 |

C. BUILDING SQUARE FOOTAGE BREAK DOWN:
BUILDING AREA - GROSS SQUARE FOOTAGE = 2,589 S.F.
(INSIDE OF PERIMETER WALL)

D. CONSTRUCTION TYPE: 5-B TABLE 503

HEIGHT/AREA CALCULATIONS:

E. ALLOWED HEIGHT: 1 STORY, 40' TABLE 503
ACTUAL HEIGHT: 1 STORY, 20'-6" (parapet)
ALLOWED AREA: 60000S.F. TABLE 503
ACTUAL BUILDING AREA: 2,589 S.F.

EGRESS:

F. OCCUPANT LOAD: 68 OCCUPANTS SECTION 1004.1.2
EGRESS WIDTH REQUIRED: 2" PER PERSON = 13.6" TABLE 1005.3.2
MINIMUM DOOR WIDTH: 32" SECTION 1008.1.1
EGRESS WIDTH PROVIDED: (1) @ 72", (1) @ 36", (1) @ 42" = 150" PROVIDED
MAX. TRAVEL DISTANCE ALLOWED: 200' TABLE 1016.2

## General Notes

1. ALL WORK DONE BY THIS CONTRACTOR AND/OR HIS SUBCONTRACTORS SHALL BE PERFORMED IN STRICT ACCORDANCE WITH ALL EXISTING CITY, STATE AND NATIONAL BUILDING CODES, LAWS, SPECIAL ORDINANCES, AND/OR REGULATIONS.
2. CONTRACTOR SHALL FIELD VERIFY ALL EXISTING DIMENSIONS AND CONDITIONS PRIOR TO STARTING ANY CONSTRUCTION. STARTING OF CONSTRUCTION MEANS APPROVAL OF CONDITIONS.
3. THE CONTRACTOR SHALL VERIFY ALL EQUIPMENT REQUIREMENTS PRIOR TO START OF CONSTRUCTION.
4. THE GENERAL CONTRACTOR SHALL INSTALL OWNER PROVIDED OCCUPANT LOAD SIGN IN THE DINING AREA BY THE MAIN EXIT STATING THE MAXIMUM OCCUPANT LOAD.
5. THE GENERAL CONTRACTOR SHALL MOUNT OWNER PROVIDED ACCESSIBILITY RESTROOM SIGNS ON THE LATCH SIDE OF RESTROOM DOORS, MOUNTED 60 INCHES TO THE CENTER OF THE SIGNS FROM THE FINISHED FLOOR.
6. SELF SERVICE SHELVES AND DISPENSING DEVISES FOR TABLEWARE, DISHWARE, CONDIMENTS, FOOD AND BEVERAGES SHALL BE INSTALLED TO COMPLY WITH ADA 42 AND FIGURE 5.A.
7. PROVIDE FIRE EXTINGUISHERS PER THE LOCAL FIRE CODE.
8. CONTRACTOR TO VERIFY ALL OWNER PROVIDED ITEMS AND INSTALLATION WORK REQUIRED OF CONTRACTOR PRIOR TO PURCHASING OF MATERIALS OR STARTING OF CONSTRUCTION.
9. CONTRACTOR SHALL COORDINATE THE INSTALLATION ALL FURNITURE VENDOR PROVIDED WORK ON THE PROJECT.
10. THE CONTRACTOR IS RESPONSIBLE FOR OBTAINING ALL APPLICABLE PERMITS ON THE PROJECT, BUILDING PERMIT, HEALTH DEPARTMENT, ETC. PRIOR TO STARTING OF ANY CONSTRUCTION ON THE PROJECT. COPIES OF ALL PERMITS SHALL BE DISTRIBUTED TO THE OWNER AND ARCHITECT.
11. CONTRACTOR TO INSPECT AND INVENTORY ALL "OWNER SUPPLIED" MATERIALS UPON DELIVERY AND REPORT ANY DISCREPANCIES IMMEDIATELY TO THE OWNER.

## Vicinity Map

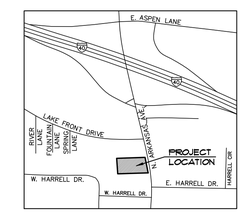


North

VICINITY MAP
Russellville, Arkansas
(Not To Scale)

## Legal Description

THE TRACT OF LAND SITUATED IN THE SE/4 OF THE NE/4 OF SECTION 32, T-8-N, R-20-W AND HAVING APPROXIMATELY 170 FEET OF FRONTAGE ON THE WEST SIDE OF STATE HIGHWAY 7, TOGETHER WITH THE IMPROVEMENTS THEREON TO INCLUDE THE EXISTING RESTAURANT BUILDING AND SIGNAGE BEING DESCRIBED AS 2321 NORTH ARKANSAS, RUSSELLVILLE, POPE COUNTY, ARKANSAS, BEING MORE PARTICULARLY DESCRIBED AS FOLLOWS, TO WIT:
A PART OF THE SE/4 OF THE NE/4 OF SECTION 32, T-8-N, R-20-W, RUSSELLVILLE, POPE COUNTY, ARKANSAS, MORE PARTICULARLY DESCRIBED AS FOLLOWS: COMMENCING AT THE NW CORNER OF SAID SE/4 OF THE NE/4; THENCE S 01° 22' 40" E, 330.000FT.; THENCE N 88° 19' 35" E, 943.00 FT. TO THE POINT OF BEGINNING; THENCE CONTINUE N. 88° 19' 35" E, 288.10 FT. TO A POINT ON THE WEST RIGHT OF WAY OF STATE HIGHWAY NO. 7; THENCE S 14° 23' 50" E. ALONG SAID RIGHT OF WAY, 125.10 FT.; THENCE S 12° 21' 20" E, ALONG SAID RIGHT OF WAY, 44.50FT.; THENCE S 88° 36' 55" W, 316.35FT. TO A POINT ON AN EXISTING FENCE; THENCE N 03° 11' 05" W, ALONG SAID FENCE, 164.60 FT. TO THE POINT OF BEGINNING, AND A 10.00 FT. WIDE SEWER EASEMENT DESCRIBED AS BEGINNING AT THE NW CORNER OF THE ABOVE DESCRIBED PROPERTY; THENCE S. 03° 11' 05" E, 10.00 FT. THENCE S. 88° 19' 35" W, 273.30 FT.; THENCE N. 01° 40' 25" E, 10.00 FT.; THENCE N. 88° 19' 35" E, 273.00 FT. TO THE POINT OF BEGINNING.


OWNER:
RB AMERICAN GROUP
4940 EAST 49th STREET
TULSA, OKLAHOMA 74135
PHONE: 918-610-2236

ARCHITECT:
CHRIS WHITE ARCHITECT
5801 E 41st ST., SUITE 712
TULSA, OKLAHOMA 74135
PHONE: 918-664-1557

STRUCTURAL ENGINEER:
SNOWDEN ENGINEERING INC.
8128 EAST 63rd SOUTH
TULSA, OKLAHOMA 74133
PHONE: 918-252-4557


"I Hereby Certify That These Plans And Specifications Have Been Prepared By Me, Or Under My Supervision. I Further Certify That To The Best Of My Knowledge These Plans And Specifications Are As Required By Law And In Compliance With The Arkansas Fire Prevention Code For The State Of Arkansas".

CHRISTOPHER W. WHITE, AIA


Christopher W. White
Architect AR #3086
5801 E. 41st St., Suite 712
Tulsa, Oklahoma


CHRISTOPHER W. WHITE
REGISTERED ARCHITECT
No. 3086
ARKANSAS

11-24-20

Revisions:


White Design Group, P.C.
Restaurant and Interiors Consulting
5801 EAST 41ST STREET, SUITE 712, TULSA, OKLAHOMA 74135


New Remodel For:
Arby's #7004 - 2321 N. Arkansas Ave.
Russellville, Arkansas

Sheet Content
Sheet Index, General Notes, Code Info., Legal Description, Vicinity Map

Sheet Number
G101
Date: 11-24-20

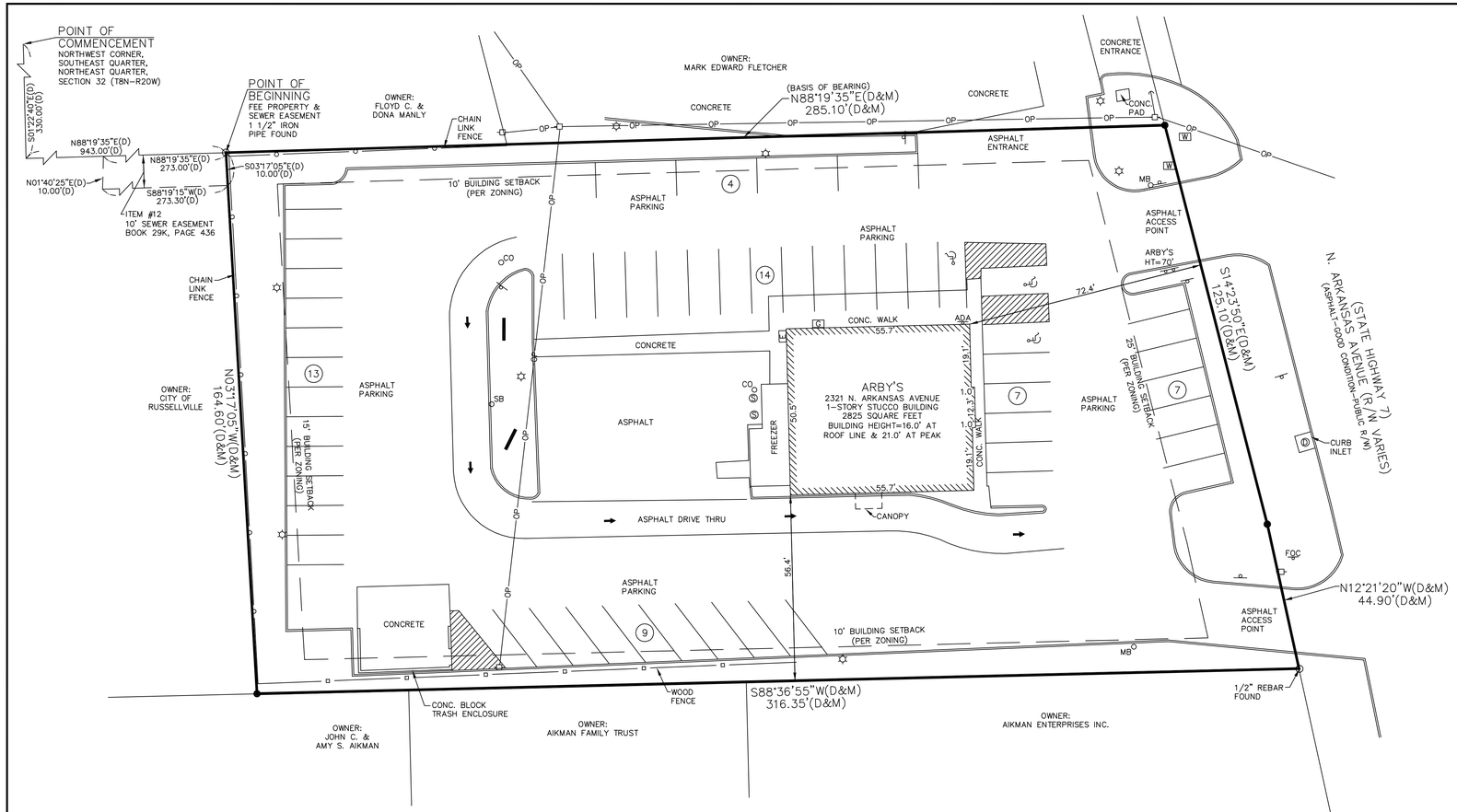


LEGEND:

- 1/2"x24" REBAR W/CAP SET (UNLESS NOTED OTHERWISE)
- MONUMENT FOUND
- ELECTRIC METER
- POWER POLE
- LIGHT POLE
- SANITARY SEWER MANHOLE
- PARKING STALL COUNT
- HANDICAP PARKING SIGN
- STORM SEWER MANHOLE
- STREET/TRAFFIC SIGN
- OVERHEAD POWER LINE
- GUY ANCHOR
- CHAIN LINK FENCE
- WOOD FENCE
- GAS METER
- WATER METER
- COMMUNICATION CABLE SIGN
- HANDICAPPED PARKING STALL
- SANITARY SEWER CLEANOUT
- MAIL BOX
- MENU BOARD
- SPEAKER BOX
- BUSINESS SIGN
- (D) DESCRIBED
- (M) MEASURED

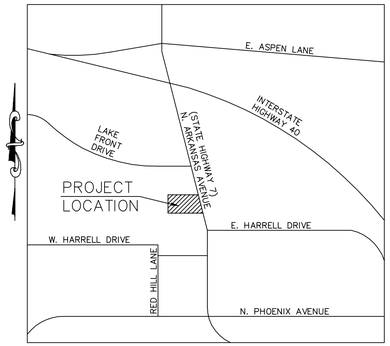


VICINITY MAP:
NOT TO SCALE

UTILITY NOTE:
"THE UNDERGROUND UTILITIES SHOWN HAVE BEEN LOCATED FROM FIELD SURVEY INFORMATION AND EXISTING DRAWINGS, THE SURVEYOR MAKES NO GUARANTEE THAT THE UNDERGROUND UTILITIES SHOWN COMPRISE ALL SUCH UTILITIES IN THE AREA, EITHER IN SERVICE OR ABANDONED. THE SURVEYOR FURTHER DOES NOT WARRANT THAT THE UNDERGROUND UTILITIES SHOWN ARE IN EXACT LOCATION INDICATED ALTHOUGH HE DOES CERTIFY THAT THEY ARE LOCATED AS ACCURATELY AS POSSIBLE FROM THE INFORMATION AVAILABLE. THIS SURVEYOR HAS NOT PHYSICALLY LOCATED THE UNDERGROUND UTILITIES."

Dig Safely.
Arkansas One-Call
1-800-482-8998

GRAPHIC SCALE

20 0 10 20 40 80

( IN FEET )
1 inch = 20 ft.

PROPERTY ADDRESS:
2321 N. ARKANSAS AVENUE, RUSSELLVILLE, ARKANSAS

LAND AREA:
49,809 SQUARE FEET OR 1.14 ACRES, MORE OR LESS.

REFERENCE PLAT:
ALTA/ACSM LAND TITLE SURVEY OF SUBJECT PROPERTY PERFORMED BY HALE–MARTIN ASSOCIATES INC. PROJECT NUMBER 406–02 DATED MAY 12, 1999.

ENCROACHMENT:
THERE APPEARS TO BE NO ENCROACHMENTS ON THE SUBJECT PROPERTY AT THE TIME OF SURVEY.

NOTES:
1. PER THE CITY OF RUSELLVILLE, ARKANSAS ZONING REGULATIONS, THIS PROPERTY IS ZONED "C–4" – NEIGHBORHOOD/QUIET BUSINESS DISTRICT.
2. "C–4" ZONING REQUIREMENTS:
   SETBACKS; FRONT: 25 FEET; SIDE: 10 FEET; REAR: 15 FEET
   MAXIMUM BUILDING HEIGHT: NONE
   MAXIMUM BUILDING COVERAGE: 40%
   PARKING REQUIREMENTS: ONE SPACE FOR EACH 150 SQUARE FEET OF FLOOR SPACE IN THE BUILDING USED FOR RETAIL TRADE OR USED BY THE PUBLIC, WHICHEVER IS GREATER
3. THERE EXISTS A TOTAL OF 54 PARKING STALLS ON THE SUBJECT PROPERTY (51 REGULAR + 3 HANDICAPPED).
4. THE SUBJECT PROPERTY IS LOCATED IN AN AREA LABELED ZONE "X" (AREAS DETERMINED TO BE OUTSIDE OF THE OF 0.2% ANNUAL CHANCE FLOOD PLAIN) AS DETERMINED BY FEMA FLOOD INSURANCE RATE MAP NUMBER 05115C0370F, EFFECTIVE DATE APRIL 17, 2012.
5. DIRECT ACCESS TO THE SUBJECT PROPERTY TO AND FROM N. ARKANSAS AVENUE (STATE HIGHWAY 7), A DULY DEDICATED AND ACCEPTED PUBLIC STREET OR HIGHWAY.
6. THE BASIS OF BEARING USED FOR THIS SURVEY WAS N88°19'35"E ON THE NORTH LINE OF THE SUBJECT PROPERTY.
7. UNDER THE CURRENT ZONING THE SUBJECT PROPERTY ALLOWS FOR A RESTAURANT.
8. DRAINAGE APPEARS TO DRAIN INTO PUBLIC RIGHT–OF WAYS BASED ON OBSERVATIONS, UNABLE TO DETERMINE DRAINAGE DIRECTION.
9. ALL UTILITIES APPEAR TO ENTER THE PROPERTY VIA A PUBLIC RIGHT–OF–WAY OR VIA A UTILITY EASEMENT.
10. THERE IS NO OBSERVABLE EVIDENCE OF THE SITE BEING USED AS A SOLID WASTE DUMP, SUMP OR SANITARY LANDFILL.
11. THERE IS NO OBSERVABLE EVIDENCE OF RECENT STREET OR SIDEWALK CONSTRUCTION OR REPAIRS.
12. THERE ARE NO CHANGES IN STREET RIGHT OF WAY LINES EITHER COMPLETED OR PROPOSED, AND AVAILABLE FROM THE CONTROLLING JURISDICTION.
13. THERE IS NO OBSERVABLE EVIDENCE OF EARTH MOVING WORK, BUILDING CONSTRUCTION OF BUILDING ADDITIONS WITHIN RECENT MONTHS.
14. NO EVIDENCE OF POTENTIAL WETLANDS WERE OBSERVED ON THE SUBJECT PROPERTY AT THE TIME THE SURVEY WAS CONDUCTED, NOR HAVE WE RECEIVED ANY DOCUMENTATION OF ANY WETLANDS BEING LOCATED ON THE SUBJECT PROPERTY.
15. THIS SURVEY MAP CORRECTLY REPRESENTS THE FACTS FOUND AT THE TIME OF THE SURVEY.
16. THERE ARE NO DISCREPANCIES BETWEEN THE BOUNDARY LINES OF THE PROPERTY AS SHOWN ON THIS SURVEY MAP AND AS DESCRIBED IN THE LEGAL DESCRIPTION PRESENTED IN THE TITLE COMMITMENT.
17. THE BOUNDARY LINES OF THE PROPERTY ARE CONTIGUOUS WITH THE BOUNDARY LINES OF ALL ADJOINING STREETS, HIGHWAYS, RIGHTS OF WAY AND EASEMENTS, PUBLIC OR PRIVATE, WITHOUT GORES, GAPS OR OVERLAPS, AS DESCRIBED IN THEIR MOST RECENT RESPECTIVE LEGAL DESCRIPTIONS OF RECORD.
18. EXCEPT AS OTHERWISE NOTED BELOW, IF THE PROPERTY CONSISTS OF TWO OR MORE PARCELS, THERE ARE NO GAPS OR GORES BETWEEN SAID PARCELS.
19. THERE IS NO OBSERVABLE EVIDENCE OF EASEMENT OR RIGHTS OF WAY ON OR ACROSS THE SURVEYED PROPERTY, OR ON ADJOINING PROPERTIES IF THEY APPEAR TO AFFECT THE SURVEYED PROPERTY, UNLESS OTHERWISE SHOWN HEREON.
20. THERE ARE NO OBSERVABLE PARTY WALL AND NO OBSERVABLE ABOVE GROUND ENCROACHMENTS EITHER (A) BY THE IMPROVEMENTS ON THE SUBJECT PROPERTY UPON ADJOINING PROPERTIES, STREETS, ALLEYS, EASEMENTS, OR RIGHTS OF WAY, OR (B) BY THE IMPROVEMENTS ON ANY ADJOINING PROPERTIES, STREETS, OR ALLEYS UPON THE SUBJECT PROPERTY EXCEPT AS OTHERWISE SHOWN HEREON.
21. THE LOCATION OF EACH EASEMENT, RIGHT OF WAY, SERVITUDE, AND OTHER MATTER (ABOVE OR BELOW GROUND) AFFECTING THE SUBJECT PROPERTY AND LISTED IN TITLE COMMITMENT NO. NCS–907276–360–OMHA, DATED JULY 2, 2018, ISSUED BY FIRST AMERICAN TITLE INSURANCE COMPANY, WITH RESPECT TO THE SUBJECT PROPERTY, HAS BEEN SHOWN ON THE SURVEY, TOGETHER WITH APPROPRIATE RECORDING REFERENCES, TO THE EXTENT THAT SUCH MATTERS CAN BE LOCATED. THE PROPERTY SHOWN ON THE SURVEY IS ONE AND THE SAME AS THE PROPERTY DESCRIBED IN THE REFERENCED TITLE COMMITMENT.
22. THE SUBJECT PROPERTY DOES NOT APPEAR TO SERVE ANY ADJOINING PROPERTY FOR DRAINAGE, UTILITIES, STRUCTURAL SUPPORT, INGRESS OR EGRESS.
23. THE RECORD DESCRIPTION OF THE SUBJECT PROPERTY FORMS A MATHEMATICALLY CLOSED FIGURE.
24. THERE IS NO OBSERVABLE EVIDENCE OF ANY CEMETERIES OR BURIAL GROUNDS ON THE SUBJECT PROPERTY AT THE TIME THE FIELD SURVEY WAS CONDUCTED.

SURVEY REFERENCE:
TITLE COMMITMENT NUMBER: NCS–907276–360–OMHA
EFFECTIVE DATE: JULY, 2018 AT 7:00 A.M.
FIRST AMERICAN TITLE INSURANCE COMPANY

12. TERMS AND CONDITIONS OF MEMORANDUM OF LEASE AGREEMENT EXECUTED BY AND BETWEEN BERT L PAGE, JR., AND PATRICIA K. PAGE, HUSBAND AND WIFE AND UNITED STATES BEEF CORPORATION, RECORDED IN BOOK 29K AT PAGE 436, RECORDS OF POPE COUNTY, ARKANSAS. (AFFECTS THE SUBJECT PROPERTY AND IS BLANKET IN NATURE – SEWER EASEMENT IS PLOTTED AND SHOWN)

DESCRIPTION:
A PART OF THE SOUTHEAST 1/4 OF THE NORTHEAST 1/4 OF SECTION 32, TOWNSHIP 8 NORTH, RANGE 20 WEST, RUSSELLVILLE, POPE COUNTY, ARKANSAS, MORE PARTICULARLY DESCRIBED AS FOLLOWS: COMMENCING AT THE NORTHWEST CORNER OF SAID SOUTHEAST 1/4 OF THE NORTHEAST 1/4; THENCE SOUTH 01 DEGREES 22 MINUTES 40 SECONDS EAST, 330.00 FEET; THENCE NORTH 88 DEGREES 19 MINUTES 35 SECONDS EAST, 943.00 FEET TO THE POINT OF BEGINNING; THENCE CONTINUE NORTH 88 DEGREES 19 MINUTES 35 SECONDS EAST, 285.10 FEET TO A POINT ON THE WEST RIGHT OF WAY OF STATE HIGHWAY NO. 7; THENCE SOUTH 14 DEGREES 23 MINUTES 50 SECONDS EAST ALONG SAID RIGHT OF WAY, 125.10 FEET; THENCE SOUTH 12 DEGREES 21 MINUTES 20 SECONDS EAST ALONG SAID RIGHT OF WAY, 44.90 FEET; THENCE SOUTH 88 DEGREES 36 MINUTES 55 SECONDS WEST, 316.35 FEET TO A POINT ON AN EXISTING FENCE; THENCE NORTH 03 DEGREES 17 MINUTES 05 SECONDS WEST ALONG SAID FENCE, 164.60 FEET TO THE POINT OF BEGINNING. ALSO A 10.00 FOOT WIDE SEWER EASEMENT DESCRIBED AS BEGINNING AT THE NORTHWEST CORNER OF THE ABOVE DESCRIBED PROPERTY; THENCE SOUTH 03 DEGREES 17 MINUTES 05 SECONDS EAST, 10.00 FEET; THENCE SOUTH 88 DEGREES 19 MINUTES 15 SECONDS WEST, 273.30 FEET; THENCE NORTH 01 DEGREES 40 MINUTES 25 SECONDS EAST, 10.00 FEET; THENCE NORTH 88 DEGREES 19 MINUTES 35 SECONDS EAST, 273.00 FEET TO THE POINT OF BEGINNING.

SURVEYOR'S CERTIFICATE:
TO: RB AMERICAN GROUP LLC, A DELAWARE LIMITED LIABILITY COMPANY, RB ARKANSAS LLC, A DELAWARE LIMITED LIABILITY COMPANY, FIRST AMERICAN TITLE INSURANCE COMPANY AND THE MATTHEWS COMPANY, INC.:

THIS IS TO CERTIFY THAT THIS MAP OR PLAT AND THE SURVEY ON WHICH IT IS BASED WERE MADE IN ACCORDANCE WITH THE 2016 MINIMUM STANDARD DETAIL REQUIREMENTS FOR ALTA/NSPS LAND TITLE SURVEYS, JOINTLY ESTABLISHED AND ADOPTED BY ALTA AND NSPS, AND INCLUDES ITEMS 1, 2, 3, 4 6(A) 6(B), 7(A), 7(B1), 7(C), 8, 9, 10(A), 13, 14, 16, 17 AND 20 OF TABLE A THEREOF. THE FIELD WORK WAS COMPLETED ON JULY 30, 2018.

DATE OF PLAT OR MAP: AUGUST 6, 2018

HAROLD D. RODGERS, JR. _____
ARKANSAS LS–1422

REGISTERED STATE OF ARKANSAS No. 1422 HAROLD D. RODGERS PROFESSIONAL LAND SURVEYOR

This Survey has been prepared solely for the benefit of the parties set forth in this Surveyor's Certification and may not be quoted or relied upon by, nor may copies be delivered to, any other party or used for any other purpose including, without limitation, the preparation of zoning reports or any other third party reports, without The Matthews Company, Inc. and Design Surveys, LLC's prior written consent. The Matthews Company, Inc. and Design Surveys, LLC expressly disclaims any duty or obligation towards any party that is not identified in this Surveyor's Certification.

Please be advised that The Matthews Company, Inc. and Design Surveys, LLC will not include the providers of any third party reports in the Surveyor's Certification.

DESIGN SURVEYS, LLC
1237 SPRUCE STREET
EUDORA, KANSAS 66025

"ALTA/NSPS LAND TITLE SURVEY"
PREPARED FOR:

THE MATTHEWS COMPANY Inc.®

17220 Newhope Street, Suites 108-110, Fountain Valley, CA 92708
Tel: (714)-979-7181 Fax: (714)-641-2840
www.thematthewscompany.com

| MARK | DATE | REVISION | BY | AP'V'D |
|---|---|---|---|---|
| | | | | |
| | | | | |
| | | | | |

**RB American Group LLC**

2321 N. Arkansas Avenue
Russellville, Arkansas
(Arby's)

| | |
|---|---|
| SCALE: 1"=20' | CHKD./AP'V'D: |
| DATE: 08/06/18 | APPROVED: |
| DWN. BY: JMT | STORE NO.: 7004 |
| CHKD BY: | |



DESIGN SURVEYS: 18-3906 JN: 18-07-24-10017

Christopher W. White
Architect AR #3086
5801 E. 41st St., Suite 712
Tulsa, Oklahoma

CHRISTOPHER W. WHITE
REGISTERED ARCHITECT
No. 3086
ARKANSAS

11-24-20

**Revisions:**

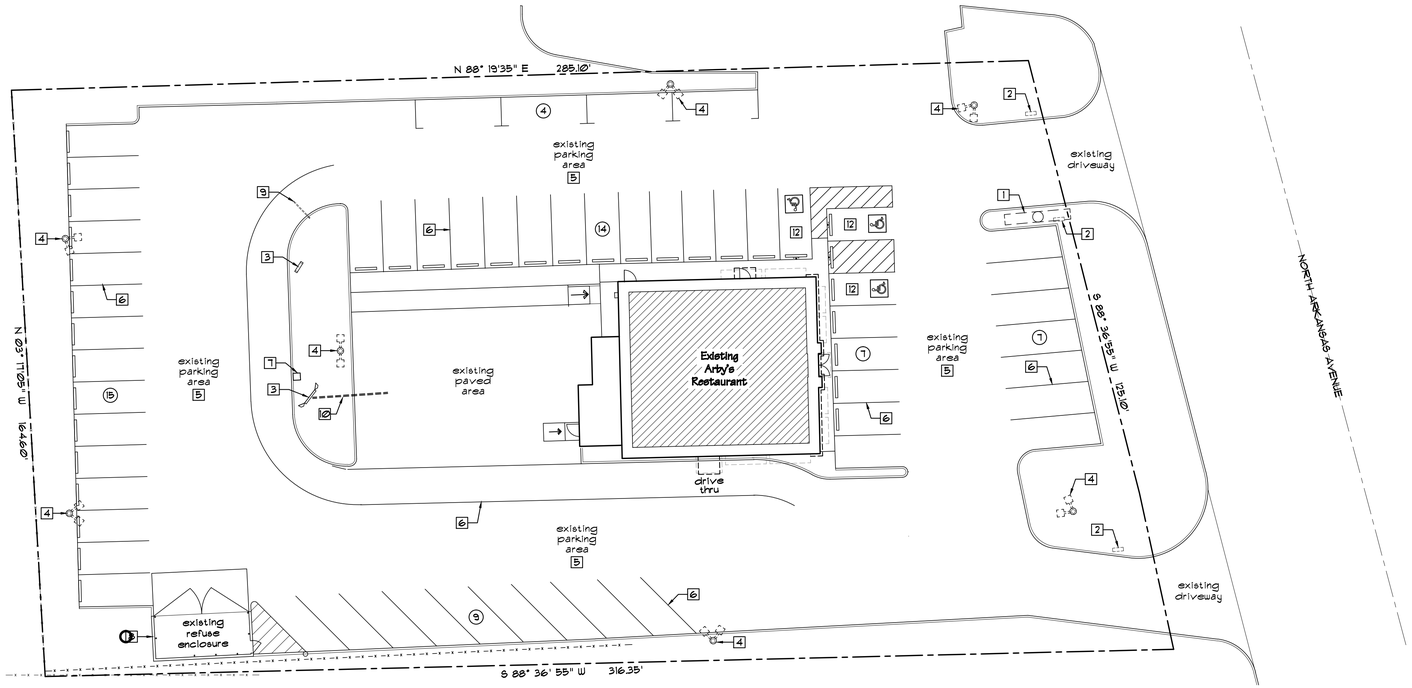


North

## Site Plan

A / C101

Scale: 1" - 20'-0"

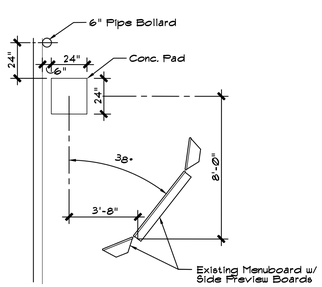


* Verify Exact Location And Configuration W/Owner's Representative In Field.

## Plan Detail

B / C101

Scale: 1/4"=1'-0"

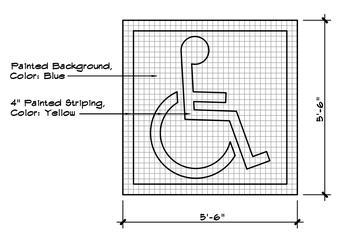


## Plan Detail

C / C101

Scale: 1/2"=1'-0"

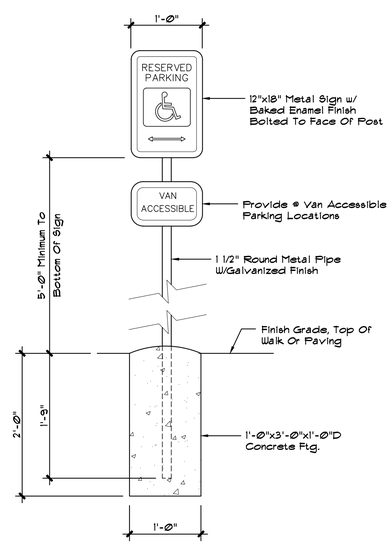


## Sign Detail

D / C101

Scale: 1/2"=1'-0"

## General Notes

1. Crack Fill, Seal & Re-stripe The All Asphalt Areas Of The Parking Lot. Contractor To Sandblast Existing Striping And Curb Painting Prior To Painting.
2. Crack Fill & Re-Stripe Concrete Drive-Thru Lane.
3. Verify Existing Irrigation System, Make Recommendations To Owner For Any Modifications.
4. Patch And Repair Any Existing Sidewalks That Are Affected By The Work.
5. All Signage Work Shall Be Performed Under A Separate Permit.
6. Repaint The Existing Pipe Handrails And Bollards On The Project, Refer: Exterior Finish Notes.
7. Repaint All Existing Concrete Pole Bases To Match E.I.F.S.

## Accessible Route Requirements

The Accessible Parking Spaces, Loading Aisles, New Concrete Ramps And Landing, And Existing Sidwalks Shall Meet Or Exceed Accessibility Requirements For Flatness Of Slope, And Cross Slope Along The Accessible Route Leading To The Building Entrance Door.

The Contractor Shall Provide Survey Information For All Existing And New Accessible Route Slope Information. The Contractor Shall Notify The Owner And Architect Of Any Accessible Route Sidewalk Condition That Is Not In Compliance With Accessible Route Flatness Requirements, Remove Any Areas Of Non-Conformance, And Provide New Construction That Is In Conformance.

All Accessible Routes Shall Comply With The Following:

1. Ground Surfaces Shall Be Stable, Firm And Slip Resistant.
2. Changes In Level Of 1/4" Shall Be Permitted To Be Vertical. Changes In Level Between 1/4" Min. And 1/2" Max. Shall Be Beveled With A Slope Not Greater Than 1:2. Changes In Level Greater Than 1/2" Shall Be Ramped.
3. The Running Slope Of The Accessible Route Shall Not Exceed 1:20 Slope. The Cross Slope Of Walking Surfaces Shall Not Exceed 1:48 Slope.
4. The Clear Width Of An Accessible Route Shall Be Not Less Than 36" Min.
5. Walking Surfaces With A Slope Greater Than 1:20 Shall Be Considered A Ramp. The Maximum Slope Of A Ramp Shall Be 1:12 Slope. The Maximum Cross Slope Of A Ramp Shall Not Exceed 1:48 Slope.
6. A Ramp With A Rise Of Greater Than 6" Shall Have Handrails On Both Sides. The Maximum Rise Of A Single Ramp Shall Be 30".
7. Accessible Parking Spaces And Passenger Loading Aisles Shall Not Exceed 1:48 Slope In Any Direction.

## Keynote Schedule

| Mark | Description |
|---|---|
| 1 | Existing Pole Mounted Signage Head To Be Replaced, Pole And Marquee To Be Reused. Paint Pole, Structure And Cabinets. |
| 2 | Existing Directional Signage To Be Removed. Cap And Bury Electrical. |
| 3 | Existing Menu & Preview Boards To Remain, Patch And Repair As Required, Provide Touch Up Paint And Make Minor Hardware Repairs As Needed. All Repairs By Owner. |
| 4 | Existing Parking Lot Light To Remain, Relamp Fixture Heads With LED Lamps. Paint Poles "Dark Bronze", Typical. |
| 5 | Existing Concrete Parking Lot, Crack Fill. Owner's Representative To Identify Areas Of Additional Repair. |
| 6 | Existing 4" Painted Striping To Be Repainted, Color: Yellow, Typical. |
| 7 | New Speaker Post, In Adjusted Location, Refer To Detail B/C101. Provide New 6" Steel Pipe Bollard In Front Of Speaker Post, Pad, Installed By Signage Vendor, Concrete Base By General Contractor. |
| 8 | Existing Refuse Enclosure To Remain. Prepare And Paint To Match Building. |
| 9 | Existing Height Detector To Be Removed. |
| 10 | The Contractor Shall Provide And Install 3/4" Conduit From Menu Board To Panels And 2" Conduit From Menu Board To Above Ceiling For Future Digital Menu Boards. Sawcut Trench And Re-Fill/Patch Across Existing Parking Lot Areas. |
| 11 | Existing Accessible Route - Verify That Existing Slopes And Grades Comply With The ADA Requirements For Accessible Routes, Parking Areas, Loading Zones And Ramps. Notify The Owner And Architect Of Any Areas Of Non-Conformance And Recommend A Solution For Barrier Removal. |
| 12 | New ADA Accessible Painted Graphic, Signage, And Striping At Existing Location. Refer: Plan Detail This Sheet. |

White Design Group, P.C.
Restaurant and Interiors Consulting
5801 EAST 41ST STREET, SUITE 712, TULSA, OKLAHOMA 74135

New Remodel For:
Arby's #7004 - 2321 N. Arkansas Ave.
Russellville, Arkansas

**Sheet Content**

Site Plan, Plan Details, Accessible Route Requirements, Sign Detail, General Notes

**Sheet Number**

C101

**Date: 11-24-20**

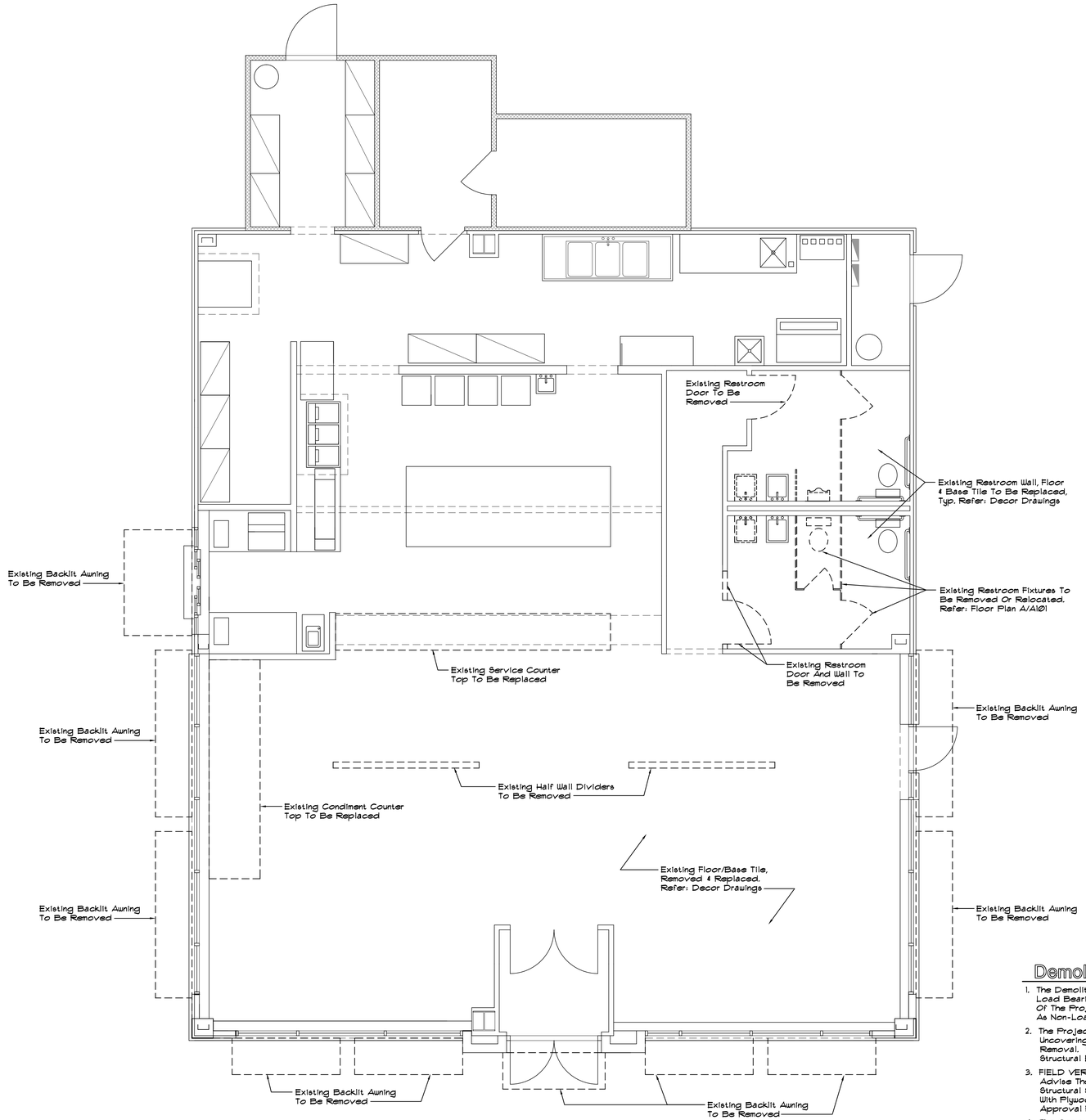


North

A DEMO

# Demolition Plan

Scale: 1/4"=1'-0"

## Demolition Notes

1. The Demolition Contractor Shall Not Remove Any Structural Load Bearing Walls, Shear Walls, Etc. Without Prior Approval Of The Project Structural Engineer. Verify All Interior Walls As Non-Load Bearing Or Shear Walls Prior To Removal.
2. The Project Structural Engineer Shall Be Notified Upon Uncovering Of Any Potential Structural Framing Prior To Removal. Removal Only Upon Permission Of The Project Structural Engineer.
3. FIELD VERIFICATION REQUIRED - The Contractor Shall Advise The Architect & Structural Engineer Of Any Structural Shear Walls That Extend To The Roof Trusses With Plywood Covering And Tie-Down. Remove Only Upon Approval From The Structural Engineer.
4. The Contractor Shall Verify Any Items That Are To Be Retained For The Owner Prior To Removal From The Site.

Christopher W. White
Architect AR #3086
5801 E. 41st St., Suite 712
Tulsa, Oklahoma

CHRISTOPHER W. WHITE
REGISTERED ARCHITECT
No. 3086
ARKANSAS

11-24-20

**Revisions:**

White Design Group, P.C.
Restaurant and Interiors Consulting
5801 EAST 41ST STREET, SUITE 712, TULSA, OKLAHOMA 74135

New Remodel For:
Arby's #7004 - 2321 N. Arkansas Ave.
Russellville, Arkansas

**Sheet Content**

Demolition Plan,
Demolition Notes

**Sheet Number**

DEMO

**Date: 11-24-20**

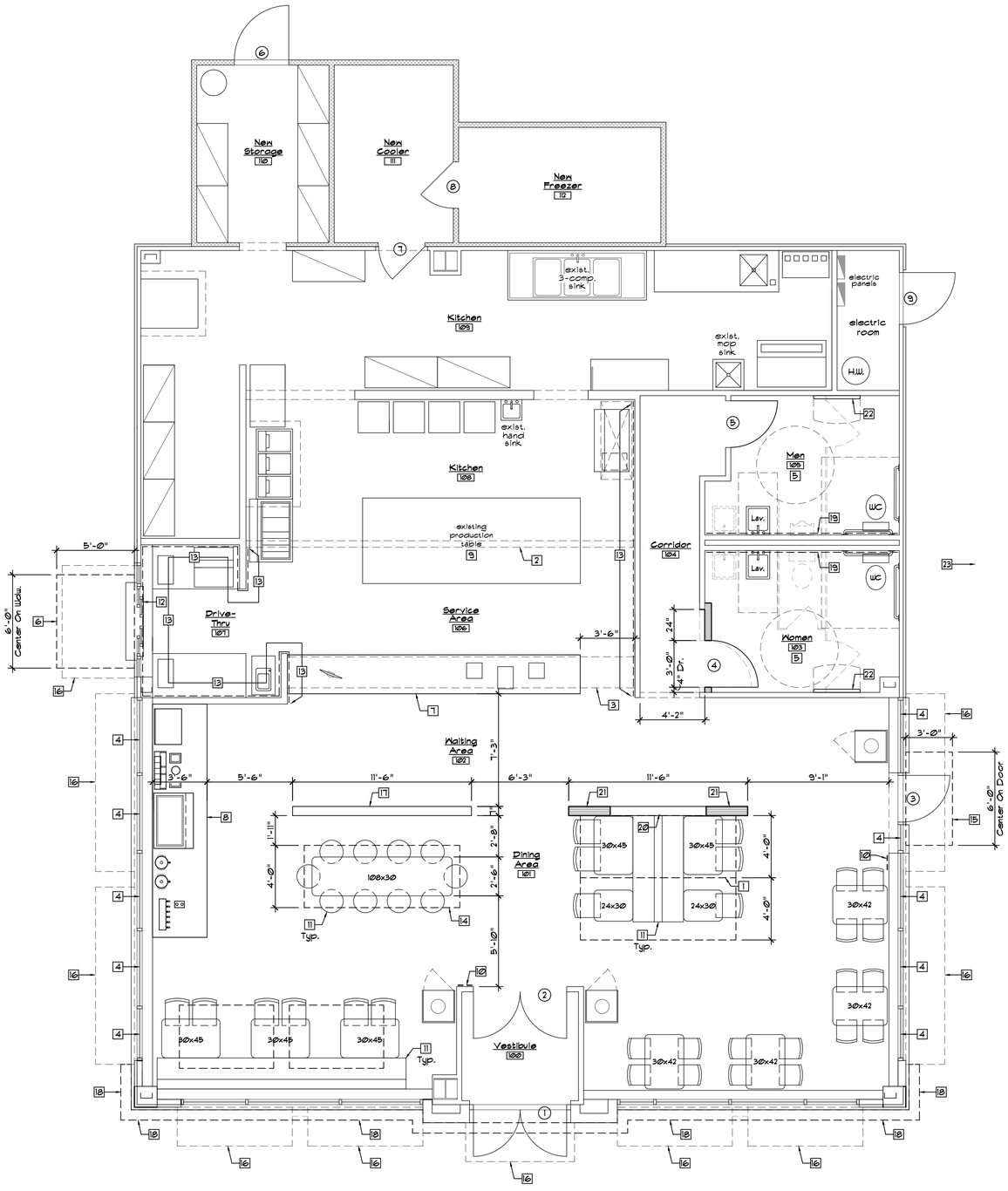


North

# Floor Plan

A101

Scale: 1/4"=1'-0"

## Legend

- New Wall Partition - Match Existing Construction
- Existing Wall To Remain
- Existing Wall To Be Removed
- Existing Walk-in Freezer/Cooler Unit Walls.

FIELD VERIFICATION NOTE:
The Contractor And Furniture Vendor Shall Verify All Existing Conditions, Dimensions, Etc. And Report Any Descrepancies And/Or Conflicts With The Proposed Work To The Owner And Architect.

## Interior Finish Notes

1. Provide New Chair Rail To Match Existing Trim Throughout Public Areas, Refer: Decor Drawings.
2. Install Faux Ceramic Wainscot Panel Between New Base Tiles And Chair Rail On All Walls Throughout Public Areas, Refer: Decor Drawings.
3. Provide New Inspire Wall Coverings Per Decor Drawings.
4. Provide New Inspire Floor & Base Tiles Throughout Dining Area And Restrooms. Refer: Decor Drawings.
5. Patch And Repair Wall And Floor Finishes As Required Throughout Kitchen.
6. Provide New Stainless Steel Band Over Existing Colored Accent Wall Tiles Where Visible To The Public.
7. Provide ProCoustic Paint For All Suspended Acoustic Ceiling Tiles Indicated To Be Replaced In The Dining Room.

## General Notes

1. Maintain Structural Integrity Of All Existing Shear Walls, Report Any Conflicts To Architect Prior To Construction.
2. Provide Moisture Resistant Backerboard At All Locations Where Ceramic Wall Tile Is Used.
3. Wood Trim Note - Ease All Edges & Sand As Required In Order To Achieve The Highest Quality Of Finished Woodworking. Provide Samples For Approval Prior To Installation.
4. General Contractor To Install Owner Supplied Seating/Decor Package.
5. Provide Firestopping In New Interior Walls At Ceiling And Other Locations As Required By Code.
6. General Contractor To Inspect Existing Dining Room Window Head, Jamb & Sill Flashing & Repair Or Replace As Required.
7. Verify All Existing Dimensions And Conditions Prior To Starting Of Any Construction.

## ADA Guidelines For Doors

1. Door Openings Shall Provide A Clear Width Of 32 Inches Minimum.
2. Thresholds, If Provided At Doorways, Shall Be 1/2 Inch High, Maximum. Raised Thresholds & Changes In Level @ Doorways Shall Comply With ADA Standard Sections 302 303.
3. Door Closers Shall Be Adjusted So That From An Open Position Of 90 Degress, The Time Required To Move The Door To A Position Of 12 Degress From The Latch Is 5 Seconds Minimum.
4. The Allowable Opening Force For Accessible Doors Shall Be 5 Pounds Maximum.

## Door Notes

1. Verify ADA Closers, Thresholds, & Opening Force On All Public Entry & Bathroom Doors.
2. Interior Signage - Contractor To Install New Owner Provided Men, Women & Occupancy Signage. Restroom Signs To Be Mounted On The Latch Side Of Restroom Doors, Mounted 60 Inches To The Center Of The Signs From The Finished Floor.
3. Repair And Reseal All Existing Exterior Door Thresholds, Provide New Weather Stripping As Required.
4. Provide Door Stops At All Exterior Doors To Prevent Damage.

## Accessibility Requirements

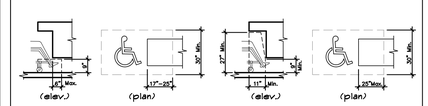


Figure 306.2 Toe Clearance — Figure 306.3 Knee Clearance

Dining Room

NOTE:
The Furniture Provider Shall Ensure That All Dining Room Furniture And Accessories Meet All Applicable Requirements Set Forth By The Accessibility Standards And Federal ADA Standards. These Requirements Include But Are Not Limited To:

1. 226.1 General. Where Dining Surfaces Are Provided For The Consumption Of Food Or Drink, At Least 5 Percent Of The Seating Spaces And Standing Spaces And Standing Spaces At The Dining Surfaces Shall Comply With 902.

2. 226.2 Dispersion. Dining Surfaces And Work Surfaces Required To Comply With 902 Shall Be Dispersed Throughout The Space Or Facility Containing Dining Surfaces And Work Surfaces.

3. 902.2 Clear Floor Or Ground Space. A Clear Floor Space Complying With 305 Positioned For A Forward Approach Shall Be Provided. Knee And Toe Clearance Complying With 306 Shall Be Provided.

4. 902.3 Height. The Tops Of Dining Surfaces Shall Be 28 Inches Minimum And 34 Inches Maximum Above The Finish Floor Or Ground.

5. The Condiment Counter And All Self Service Shelves And Dispensing Devises For Tableware, Dishware, Condiments, Food And Beverages Shall Be Installed To Comply With ADA 308 Reach Range Requirements.

## Door Schedule

1. Existing (2) 3'-0" x 7'-0" Storefront Glass Doors And Frames To Remain. Provide New ADA Closers, Push/Pull, Hardware And Threshold. Verify Panic Hardware. Clean And Refurbish As Req'd. Install Owner Provided Retro-Fit Toe Kick Panels If Existing Bottom Stile Is Less Than 10"H.

2. Existing (2) 3'-0" x 7'-0" Storefront Glass Doors And Frames To Remain. Provide New ADA Closers, Push/Pull & Hardware. Non-Lockable. Clean And Refurbish As Required. Install Owner Provided Retro-Fit Toe Kick Panels If Existing Bottom Stile Is Less Than 10"H.

3. Existing 3'-0" x 7'-0" Storefront Glass Door And Frame To Remain. Provide New ADA Closer, Push/Pull, Hardware And Threshold. Verify Panic Hardware. Clean And Refurbish As Req'd. Install Owner Provided Retro-Fit Toe Kick Panels If Existing Bottom Stile Is Less Than 10"H.

4. New 3'-0" x 7'-0" S.C. Wood Door Stained To Match Lobby Trim. Re-Use Existing Frame, Paint To Match Lobby Trim. Provide Sanitgrasp Door Pull On Pull Side, Bolt Through Door To Steel Push Plate. Provide Privacy Lock. Verify ADA Compliant Hardware & Closer.

5. New 3'-0" x 7'-0" S.C. Wood Door Stained To Match Lobby Trim. Re-Use Existing Frame, Paint To Match Lobby Trim. Provide Sanitgrasp Door Pull On Pull Side, Bolt Through Door To Steel Push Plate. Provide Privacy Lock. Verify ADA Compliant Hardware & Closer.

6. Exist. 3'-6" x 7'-0" Insulated Metal Door To Remain. Verify ADA Closer & Threshold. Verify Exist. Panic Hardware. Paint Exterior & Interior To Match Adjacent Surfaces.

7. Existing Prefabricated Cooler Door To Remain.

8. Existing Prefabricated Freezer Door To Remain.

9. Exist. 3'-6" x 7'-0" Insulated Metal Door To Remain. Verify ADA Closer & Threshold. Verify Exist. Panic Hardware. Paint Exterior & Interior To Match Adjacent Surfaces.

Note:
Contractor Shall Verify All Door Sizes Prior To Starting Construction.

## Keynote Schedule

| Mark | Description |
|---|---|
| 1 | New 4'x10' Prefabricated Wood Plank Soffit. Supplied By Owner, Installed By Seating Vendor. |
| 2 | Existing Menuboards To Be Removed By GC. New Digital Menuboards To Be Installed By Owners Vendor. Contractor's Electrician To Provide Separate Circuit W/Continuous Power For Menuboards. Install Owner Provided Faux Subway Tile Panels At Existing Bulkhead Wall, Refer: Decor Drawings. |
| 3 | Existing Soffit To Remain, Remove Existing Wood Trims, Repair And Paint Dining Room Side & Bottom. Refer: Decor Drawings. |
| 4 | Existing Glazing Unit To Remain, Typical. Replace Broken Seal Units, Typical. |
| 5 | Existing Restroom Fixtures And Accessories To Remain, Clean And Service All Fixtures And Accessories, Typical. |
| 6 | New Drive Thru Canopy. Provided And Installed By Canopy Manufacturer. Contractor To Provide New Support Blocking And Coordinate Installation. |
| 7 | Existing Service Counter To Be Modified. Remove Existing Counter Top. Install Faux Subway Tile Over Existing Finishes, New Solid Surface Counter Tops Provided And Installed By Seating Vendor. Refer: Section And Decor Drawings. |
| 8 | Existing Condiment Counter To Be Modified. Remove Existing Counter Top. New Solid Surface Counter Tops & Base Cabinet Laminate Provided And Installed By Seating Vendor. Refer: Decor Drawings. |
| 9 | Existing Production Table To Remain. |
| 10 | Provide ADA Compliant Tactile Exit Sign. |
| 11 | Furniture Provided And Installed By Furniture Vendor. Refer To Furniture Vendor Drawings For Exact Locations And Sizes. |
| 12 | Existing Drive-Thru Window To Remain. |
| 13 | Install Owner Provided Faux White Subway Tile Panels Over Existing Wall Finish Where Visible To The Public. |
| 14 | New 4'x10' Prefabricated Laminated Soffit. Supplied By Owner, Installed By Seating Vendor. |
| 15 | New Entrance Canopy. Provided And Installed By Canopy Manufacturer. Contractor To Provide New Support Blocking And Coordinate Installation. |
| 16 | Line Of Existing Backlit Awning To Be Removed. |
| 17 | New Half Wall To 4'-0" AFF., 3 5/8" Metal Studs @ 16"o.c., Provide In Wall Steel Supports As Required. Provide Finishes Per Decor Drawings. |
| 18 | Line Of New 2'-0"H. Prefabricated Metal Signage Band, Red. Provided And Installed By Signage Vendor. Contractor To Coordinate Installation. |
| 19 | New Faux Red Subway Tiles In Restroom This Wall Only. |
| 20 | New Half Wall To 4'-0" AFF., 3 5/8" Metal Studs @ 16"o.c. Provide In Wall Steel Supports As Required. |
| 21 | New Divider Wall To Ceiling, 3 5/8 Metal Studs @ 16"o.c. |
| 22 | New Baby Changing Station. Mount With 48" Max. To Top Of Operable Portion, 34" Max. To Top Of Work Surface, & 27" Min. To Bottom Of Work Surface. |


Christopher W. White
Architect AR #3086
5801 E. 41st St., Suite 712
Tulsa, Oklahoma


CHRISTOPHER W. WHITE
REGISTERED ARCHITECT
No. 3086
ARKANSAS

11-24-20

Revisions:


White Design Group, P.C.
Restaurant and Interiors Consulting
5801 EAST 41ST STREET, SUITE 712, TULSA, OKLAHOMA 74135


New Remodel For:
Arby's #7004 - 2321 N. Arkansas Ave.
Russellville, Arkansas

Sheet Content
Floor Plan, Partition Types, Door Notes, Door Schedule, ADA Guidelines For Doors, General Notes, Accessibility Req'mts., Interior Finish Notes

Sheet Number
A101

Date: 11-24-20

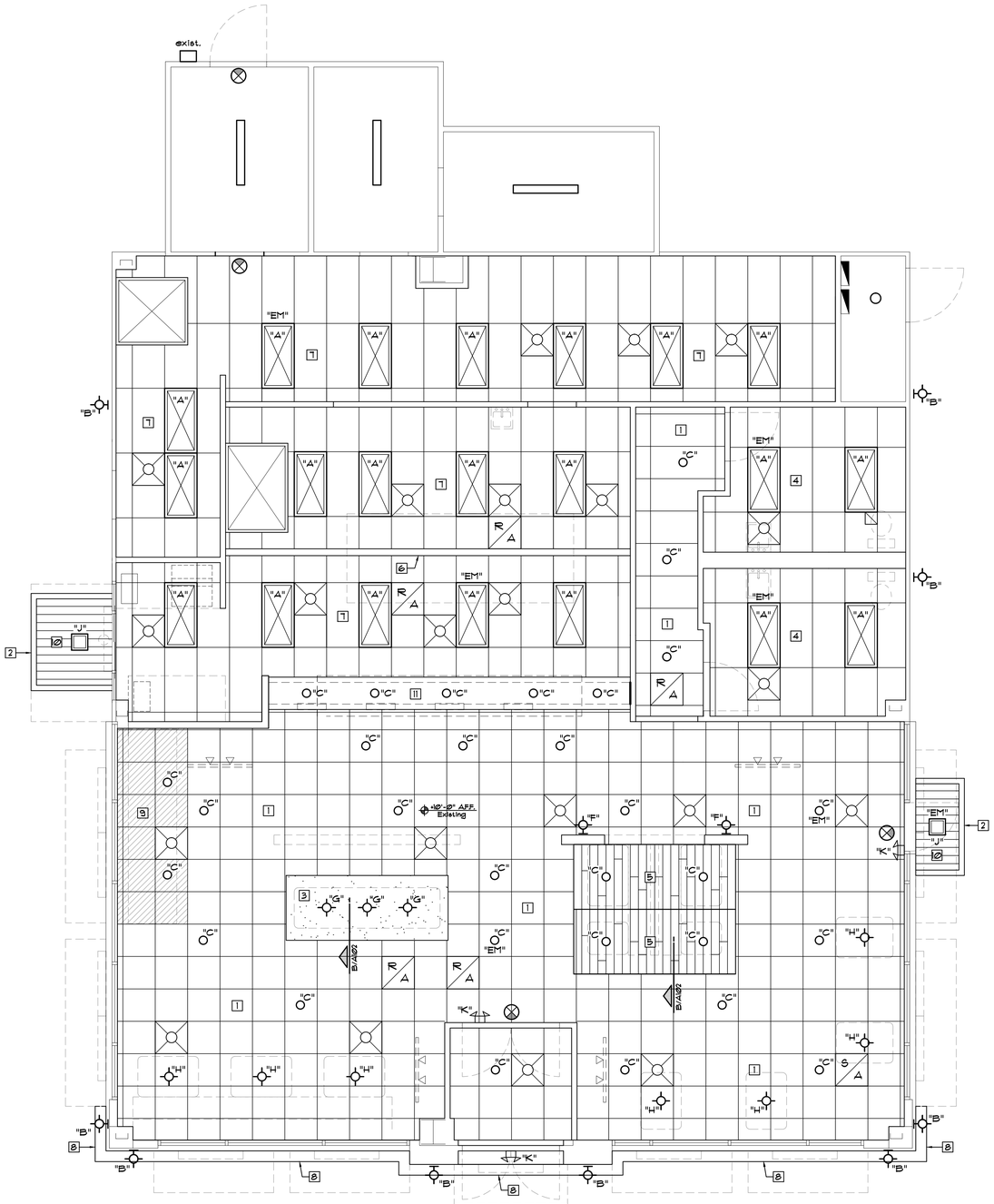


•Verify Existing Can Light Locations And Provide The Owner With A Summary Of Light Fixtures To Be Provided

## Reflected Ceiling Plan

A / A102 — Scale: 1/4"=1'-0"

North

FIELD VERIFICATION NOTE:
The Contractor And Furniture Vendor Shall Verify All Existing Conditions, Dimensions, Etc. And Report Any Descrepancies And/Or Conflicts With The Proposed Work To The Owner And Architect.

Supply Air Diffuser

Return Air Diffuser

Exhaust Fan

•9'-6" AFF. Ceiling Height

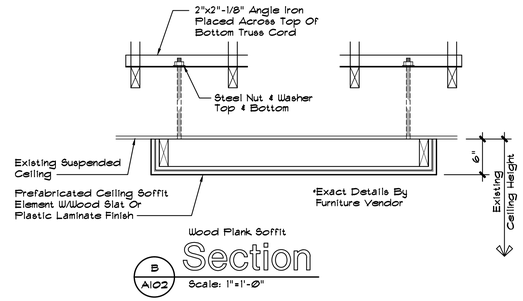


B / A102 Section — Scale: 1"=1'-0"

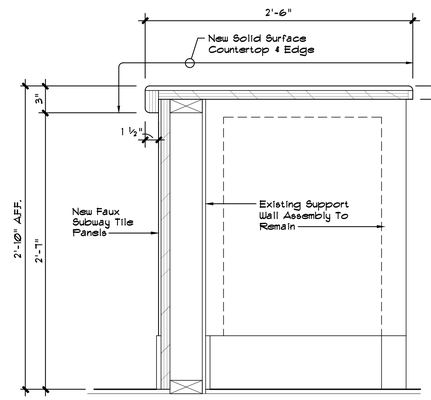


C / A102 Section — Scale: 1 1/2"=1'-0"

## Light Fixture Schedule

| FIXTURE/ TYPE | MANUFACTURER CATALOG NUMBER | VOLTS | LAMPS | MOUNTING | NOTE | REMARKS |
|---|---|---|---|---|---|---|
| "A" | New LED Replacement Light Fixture In Existing Locations, Supplied By Owner | 120 | LED | Grid | 1,5,6 | 24" x 48" Troffer w/Acrylic Cover |
| "B" | Lithonia OLLWL-WH Or Equal, Supplied By Owner | 120 | LED | Wall | 1,3,5,6 | Mount At Existing Heights & Locations. |
| "C" | Cree KR-6 13L 27K 90CC Or Equal, Supplied By Owner | 120 | LED | Recessed | 1,3,6 | Replace Exist. Can Lt. Verify W/Owner |
| "F" | New Inspire Interior Wall Sconce Supplied By Owner | 120 | LED | Wall | 1,3,5,6 | Refer To Decor Drawings For Mtg. Hts. |
| "G" | New Inspire Pendant Fixture, Kitchler 78200 Or Equal, Supplied By Owner | 120 | A19 | Pendant | 1,6 | Refer To Decor Drawings |
| "H" | New Inspire Glass Pendant Fixture , Refer: Decor Drawings, Supplied By Owner | 120 | LED | Pendant | 1,6 | Refer To Decor Drawings |
| "J" | New LED Canopy Light Mounted In New Canopy Locations, Supplied By Canopy Manufacturer | 120 | LED | Recessed | 1,3,6 | |
| "K" | New Emergency Egress Light Fixture, Juno N5LBZ9DCB Or Equal, Supplied By Owner | 120 | LED | Wall | 1,2,3,6 | Emergency Battery Backup |
| | Existing Exit Light To Be Replaced, Juno NXPCL3GWH Or Equal, Supplied By Owner | 120 | LED | Ceiling Mount | 1,2,6 | Red Letters on White panel. Emer. Power |

NOTES:
1. Verify Finish And Lamps With Owner.
2. Fixture Utilizes An Emergency Battery Backup System And Shall Provide 90 Minutes Of Backup Power
3. Fixture Shall Be U.L. Listed And Labeled For Wet Locations.
4. Provide Flange Kit When Installed In a Gypsum Board Or Any Hard Ceiling And Verify With Owner The Quantity And Location.
5. Verify Size Of Fixture And Replace With Similar, Owner To Approve Replacement Fixture Prior To Ordering.
6. All Lighting Fixtures/Lamps/Accessories Are Supplied By Owner And Installed By Contractor.
7. All Lighting Fixtures In Public Spaces Shall Be The Same Lumens And Color Temperature (K). Verify With Owner.
8. Provide Protective Lens For Can Lights Located Over Foodservice Areas As Required By The Health Department.
9. Center All Pendants On Table Tops Where Indicated.
10. Pendants Shall Be Mounted At 5'-6"A.F.F. Over Standard Ht. Tables And 6'-6" A.F.F. Over Barstool Height Tables.

## Emergency Illumination Note

The Contractor Shall Provide Emergency Lights And Ballasts To Ensure 1 Footcandle Measured At The Floor For All Exit Access Passageways, And At Exterior Of All Egress Doorways. The Emergency Power System Shall Provide Power For A Duration Of Not Less Than 90 Minutes.

## General Notes

1. The Contractor Shall Verify All Switching Types, Circuiting Requirements And Switching Locations With Owner.
2. All Lighting Fixtures To Be Provided By Owner, Installed By Contractor.
3. The Contractor Shall Coordinate The Installation Of Owner Provided New Speakers In The Public Area Ceilings. Confirm With Owner.
4. The Contractor Shall Coordinate The Installation Of Owner Provided New Building Signage. Relocate Or Provide J-Box And/Or Plywood Backing, Etc. As Required.
5. Clean All Diffusers And Returns Prior To Painting.
6. Relocate Any Existing Diffusers/Returns That Are In The Same Location As New Prefabricated Soffits.
7. Light Fixtures That Protrude 4" Or More From The Wall Surface At The Base Of The Wall Shall Be Mounted 7' High Or Have The Walking Surface Below Restricted To Prevent Non-Compliance With ADA Protruding Objects Requirements.
8. Replace Existing Public Space 2x2 Light Fixtures With New LED Recessed Can Fixtures. Verify Lighting Distribution With Owner - Add Or Relocated Fixtures As Owner Directs. Refer: Light Fixture Schedule.
9. All Ceilings Over Foodservice Preparation Areas Shall Meet Local Health Department Requirements For Washability, Light Reflectance, Etc.

## Keynote Schedule

| Mark | Description |
|---|---|
| 1 | Existing Suspended Ceiling Grid To Remain, Paint To Match Armstrong #132 'Adobe' Tiles. Provide New Armstrong #132 Fine Fissured Angled Tegular Ceiling Tiles, Color: 'Adobe'. Provide Alternate Pricing For Existing Ceiling Tiles To Remain, Patch, Repair And Paint To Match Color: 'Adobe', Verify With Owner. Install New Owner Provided Speakers At Existing Locations. |
| 2 | New 2'-0"H. Prefabricated Canopy, Red. Provided And Installed By Canopy Manufacturer. Contractor To Provide New Support Blocking And Coordinate Installation. |
| 3 | New 4'x10' Prefabricated Soffit Element With Plastic Laminate Finish, Red. Supplied By Owner, Installed By Seating Vendor. Mount To Ceiling Using All-Thread To Existing Roof Trusses, Typical. |
| 4 | Existing Restroom Ceiling Grid To Remain. Clean & Paint Grid And Devices. Patch And Repair As Required. Provide New Washable Ceiling Tiles In Existing Locations. |
| 5 | New 4'x10' Prefabricated Soffit Element With Wood Plank Finish, Stained. Supplied By Owner, Installed By Seating Vendor. Mount To Ceiling Using All-Thread To Existing Roof Trusses, Typical. |
| 6 | Existing Menu Boards To Be Remain. Provide New Faux Subway Tile Panels At Existing Bulkhead Wall, Refer Decor Drawings. |
| 7 | Existing Kitchen Ceiling Tile & Grid To Remain. Patch And Repair As Required. |
| 8 | New 2'-0"H. Prefabricated Metal Signage Band, Red. Provided & Installed By Signage Contractor, Coordinated By Contractor. |
| 9 | New Suspended Vinyl Faced Ceiling Tiles Into Existing Grid. Paint Grid, Color To Match Armstrong #128 "Adobe". Above New Condiment Counter Only. |
| 10 | New Metal Soffit Panels By Canopy Supplier. |
| 11 | Existing Soffit To Remain. Remove Existing Trans-Light Fixtures And Wood Trims. Provide Gyp. Board Finish On Front And Bottom, Painted Red. |


Christopher W. White
Architect AR #3086
5801 E. 41st St., Suite 712
Tulsa, Oklahoma


CHRISTOPHER W. WHITE REGISTERED ARCHITECT No. 3086 ARKANSAS

11-24-20

**Revisions:**


White Design Group, P.C.
Restaurant and Interiors Consulting
5801 EAST 41ST STREET, SUITE 712, TULSA, OKLAHOMA 74135


New Remodel For:
Arby's #7004 - 2321 N. Arkansas Ave.
Russellville, Arkansas

**Sheet Content**
Reflected Ceiling Plan, Light Fixture Schedule, Emergency Illumination Note, General Notes, Field Verification Note, Section

**Sheet Number**
A102

**Date: 11-24-20**

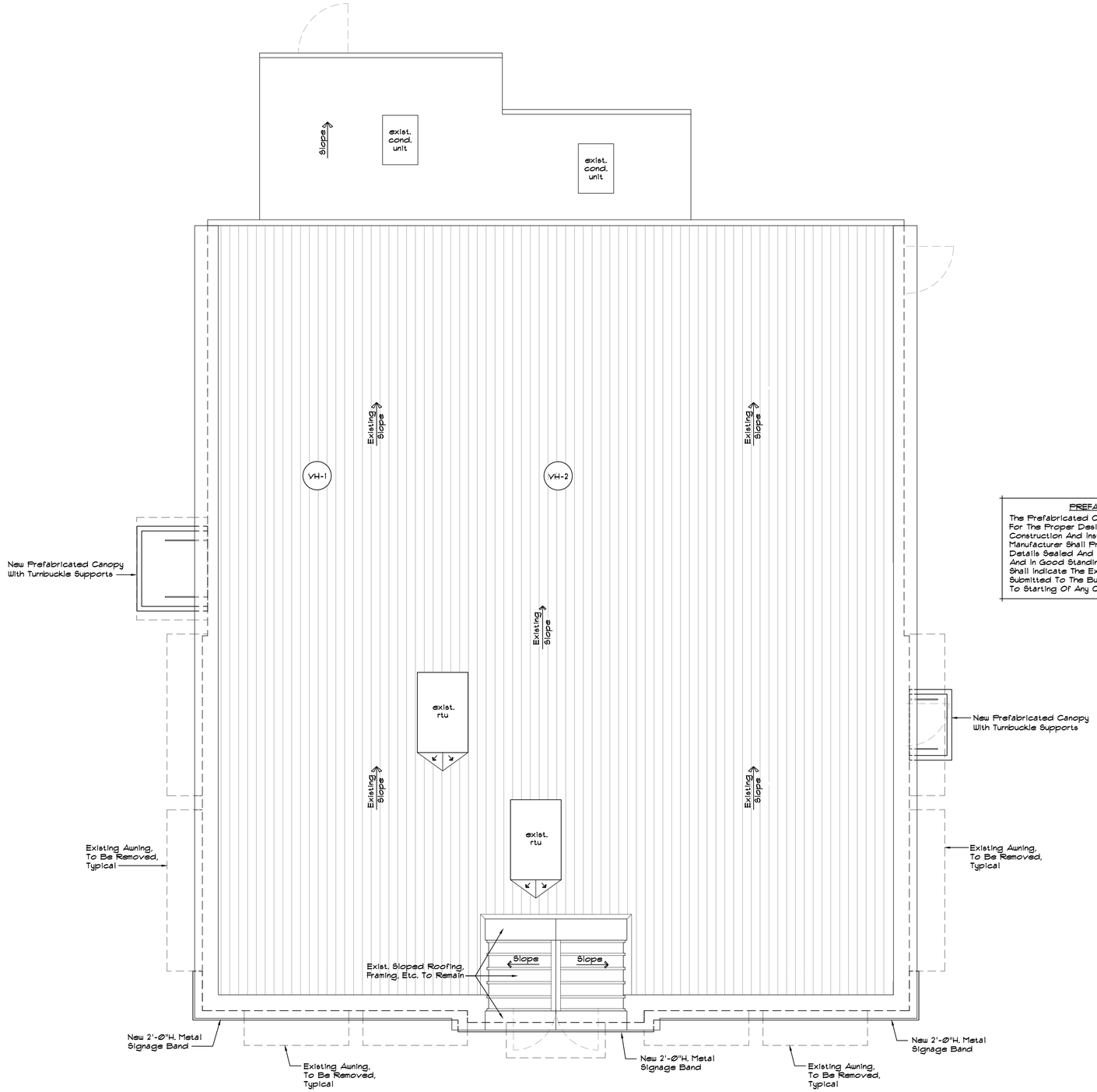


## Roof Plan

A / A103 — Scale: 1/4"=1'-0"

North

**PREFABRICATED CANOPY NOTES**

The Prefabricated Canopy Manufacturer Shall Be Responsible For The Proper Design & Engineering Required For The Construction And Installation Of The Canopies. The Canopy Manufacturer Shall Provide Fully Engineered Connection Details Sealed And Signed By A Structural Engineer Licensed And In Good Standing In Arkansas. The Design Documents Shall Indicate The Existing Conditions Accurately And Be Submitted To The Building Official, Architect, And Owner Prior To Starting Of Any Construction.

**GENERAL NOTES:**

1. The Roof Plan Represents An Approximation Of Existing Conditions, The Contractor Shall Verify And Coordinate Any Work Done On The Roof With The Architect.
2. The Contractor Shall Verify That The Roof Drainage System, Roof Drains, Etc. Are Clear And Functioning Properly.


Christopher W. White
Architect AR #3086
5801 E. 41st St., Suite 712
Tulsa, Oklahoma


CHRISTOPHER W. WHITE
REGISTERED ARCHITECT
No. 3086
ARKANSAS

03-02-20

**Revisions:**


White Design Group, P.C.
Restaurant and Interiors Consulting
5801 EAST 41ST STREET, SUITE 712, TULSA, OKLAHOMA 74135


New Remodel For:
Arby's #7004 - 2321 N. Arkansas Ave.
Russellville, Arkansas

**Sheet Content**

Roof Plan, Notes, Framing Plan, Design Loads, General Framing Notes

**Sheet Number**

A103

Date: 11-24-20

Christopher W. White
Architect AR #3086
5801 E. 41st St., Suite 712
Tulsa, Oklahoma

CHRISTOPHER W. WHITE
REGISTERED ARCHITECT
No. 3086
ARKANSAS

11-24-20

**Revisions:**

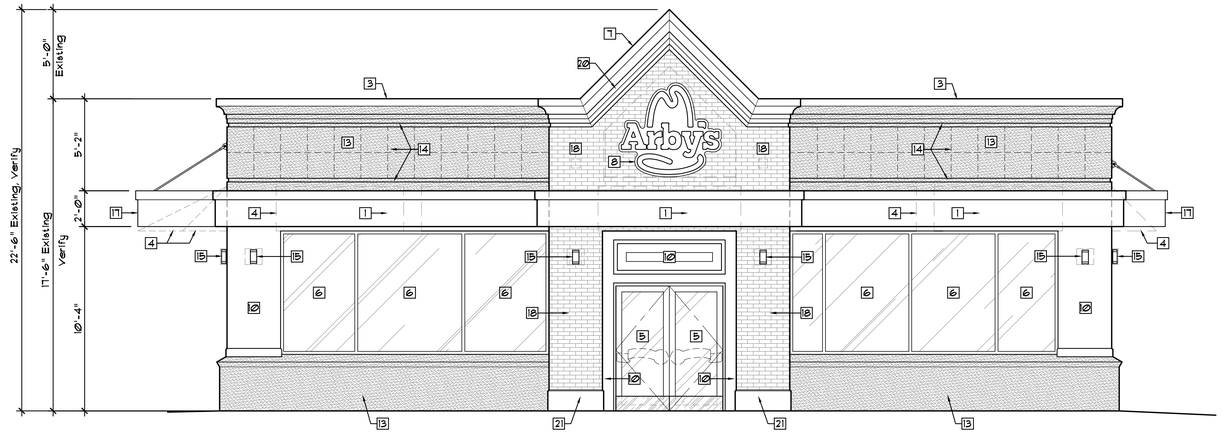


A A201 East Elevation
Scale: 1/4"=1'-0"

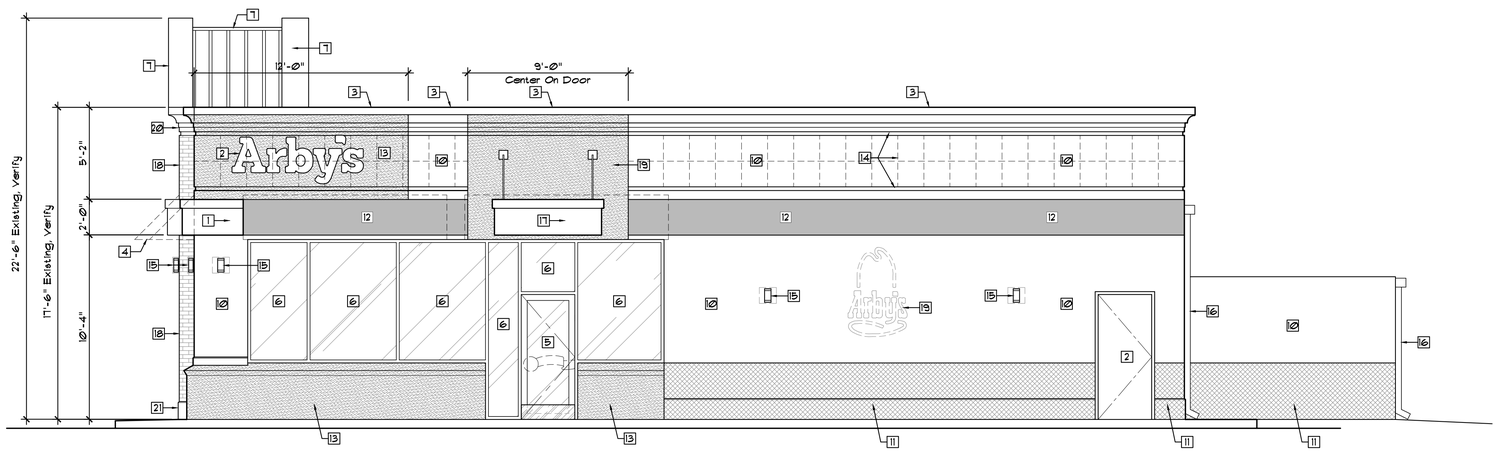


B A201 North Elevation
Scale: 1/4"=1'-0"

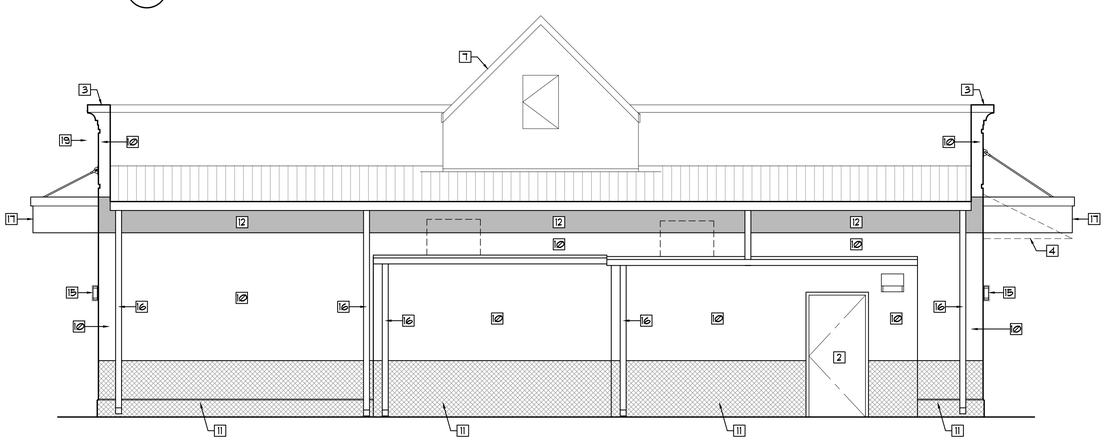

C A201 West Elevation
Scale: 1/4"=1'-0"

## Signage Note

1. All Signage Work Shall Be Performed Under A Separate Permit.

## General Notes

1. The Contractor Shall Not Perform Any Structural Demolition Prior To Field Verification From The Structural Engineer.
2. These Drawings Represent An Approximation Of Exist. Conditions. The Contractor Shall Notify The Architect Of Any Discrepancies Immediately Upon Uncovering Of The Existing Structural Conditions.
3. All Exterior Surfaces Shall Be Cleaned, Patched, Repaired As Required And Prepared To Receive New Paint Per Drawings And Utilizing Arby's Paint Specifications.
4. The Contractor Shall Provide Blocking For Signage As Directed By Suppliers.
5. The Contractor Shall Provide All Flashing, Assemblies, Details, Etc.
6. Verify And Maintain All Existing Roof Drain/Downspout Assemblies.
7. The Contractor Shall Provide All Necessary Details As Required By The E.I.F.S. Manufacturer In Order To Maintain The Warranty. Provide All Backer Rods, Sealant Locations, Flashing Minimum Coverages, Etc.
8. Provide Dryvit E.I.F.S. System Or Approved Equal, System To Have A Water Management System With Appropriate Details. Provide Submittal With Proposed System And Details Indicated. All E.I.F.S. Work Shall Be Performed Per Manufacturers Requirements To Maintain Warranty.
9. The Contractor Shall Review All New E.I.F.S., Paint & Coping Cap Colors And Their Locations With The Owner Prior To Proceeding With The Work.

PREFABRICATED CANOPY NOTES

The Prefabricated Canopy Manufacturer Shall Be Responsible For The Proper Design & Engineering Required For The Construction And Installation Of The Canopies. The Canopy Manufacturer Shall Provide Fully Engineered Connection Details Sealed And Signed By A Structural Engineer Licensed And In Good Standing In Arkansas. The Design Documents Shall Indicate The Existing Conditions Accurately And Be Submitted To The Building Official, Architect, And Owner Prior To Starting Of Any Construction.

## Paint Legend

PAINT COLOR #1
Sherwin Williams #7005 "Pure White". Satin Finish, Prepare And Prime As Required.

PAINT COLOR #2
Sherwin Williams #2808 "Rookwood Dark Brown". Satin Finish. Prepare & Prime As Required.

PAINT COLOR #3
Sherwin Williams #6869 "Stop". Satin Finish. Prepare & Prime As Required.

PAINT COLOR #4
Sherwin Williams #7024 "Functional Gray". Satin Finish. Prepare & Prime As Required.

## Exterior Finish Notes

EXTERIOR INSULATION AND FINISH SYSTEM (E.I.F.S.) W/SIM. BRICK PATTERN, COLOR #1 - FRONT TOWER
Simulated Brick Stencil Pattern W/Dryvit - Color #1: #310 "China White".

EXTERIOR INSULATION AND FINISH SYSTEM (E.I.F.S.) COLOR #1
Dryvit - Color: #310 "China White"
Sandblast Texture. Coping Color #1.

EXTERIOR INSULATION AND FINISH SYSTEM (E.I.F.S.) COLOR #2
Dryvit - Color: To Match Sherwin Williams #2808 "Rookwood Dark Brown".
Sandblast Texture. Coping Color #2.

PREFINISHED METAL COPING #1
DURO-LAST #SR.70/TE87 "Regal White". Provide Above E.I.F.S. Color #1.

PREFINISHED METAL COPING #2
DURO-LAST #SR.26/TE87 "Dark Brown". Provide Above E.I.F.S. Color #2.

PAINT COLOR #1
Sherwin Williams #7005 "Pure White". Satin Finish, Prepare And Prime As Required.

PAINT COLOR #2
Sherwin Williams #2808 "Rookwood Dark Brown". Satin Finish. Prepare & Prime As Required.

PAINT COLOR #3
Sherwin Williams #6869 "Stop". Satin Finish. Prepare & Prime As Required.

PAINT COLOR #4
Sherwin Williams #7024 "Functional Gray". Stain Finish. Prepare & Prime As Required.

PREFABRICATED 2'-0" HIGH COLOR BAND
Color: Prefinished Metal, Red. Provided By Signage Manufacturer.

## Keynote Schedule

| Mark | Description |
|---|---|
| 1 | New 2'-0"H. Metal Signage Band, Red, By Owner. Contractor To Coordinate Installation. |
| 2 | Existing Metal Door & Frame To Remain, Paint To Match Adjacent Surface. |
| 3 | Existing Prefinished Metal Coping To Remain, Paint Color #3 Red, Patch And Repair As Required, Refer: Exterior Finish Notes. |
| 4 | Existing Backlit Awning To Be Removed. |
| 5 | Existing Storefront Glass Door To Remain. Clean Frames, Repair Damaged Glass, Provide New ADA Compliant Hardware, Push/Pull, Threshold & Closer, Typical. Provide New 10" High Min. Kick Guard If Required. |
| 6 | Existing Glazing Unit To Remain, Typical. Clean Frames, Replace Broken Seal Units, Typical. |
| 7 | Existing Prefinished Sloped Metal Roofing & Framing To Remain, Paint Color #3 Red. Refer: Exterior Finish Notes. |
| 8 | New 5'-0" High Backlit 'Hat' Signage By Owner. Contractor To Coordinate Installation. |
| 9 | New 2'-0"H. Backlit Signage By Owner, At Existing Location, White Lettering On Brown E.I.F.S. Field, Red Lettering On White E.I.F.S. Field, Contractor To Coordinate Installation. |
| 10 | Existing E.I.F.S. Wall Surface, Patch And Repair As Required, Paint Color #1, Refer: Exterior Finish Notes. |
| 11 | New Painted Wainscot Over Existing Masonry & E.I.F.S, Patch And Repair As Required, Paint Color #4. Refer: Exterior Finish Notes. |
| 12 | New Painted Accent Band Over Existing E.I.F.S, Patch And Repair Wall Surface As Required, Paint Color #3. Refer: Exterior Finish Notes. |
| 13 | Existing E.I.F.S. Wall Surface Or Masonry & E.I.F.S. Wainscot, Patch And Repair As Required, Paint Color #2, Refer: Exterior Finish Notes |
| 14 | Existing E.I.F.S. Cornice, Reveals, And Ceramic Tiles To Remain. Prepare As Required And Paint Over. |
| 15 | New LED Exterior Performance Wall Sconce At Existing Location, Refer: Light Fixture Schedule. |
| 16 | Existing Downspouts And Gutter System To Remain. Prepare & Paint: Color #1. |
| 17 | New Prefabricated Canopy. Provided And Installed By Canopy Manufacturer. Contractor To Provide New Support Blocking And Coordinate Installation. |
| 18 | New E.I.F.S. Finish W/Brick Stencil Pattern, Color #1, Over Existing E.I.F.S. Remove Decorative Tiles, Skim And Fill Existing Field Of Reveals Around Sign. Refer: Exterior Finish Notes. |
| 19 | Existing Wall Mounted Signage To Be Removed, Patch And Repair Surfaces As Required, Paint. |
| 20 | Existing E.I.F.S. Cornice And Reveals At 'Brick' Tower To Be Painted Color #1. |
| 21 | Exist. E.I.F.S. Column Base Trims To Remain. Paint Color #1. Refer: Exterior Finish Notes. |

**White Design Group, P.C.**
**Restaurant and Interiors Consulting**
5801 EAST 41ST STREET, SUITE 712, TULSA, OKLAHOMA 74135

New Remodel For:
Arby's #7004 - 2321 N. Arkansas Ave.
Russellville, Arkansas

**Sheet Content**
Building Elevations, Detail, Exterior Finish Notes, Signage Note, General Notes, Legend

**Sheet Number**
A201

**Date: 11-24-20**

Christopher W. White
Architect AR #3086
5801 E. 41st St., Suite 712
Tulsa, Oklahoma

CHRISTOPHER W. WHITE
REGISTERED ARCHITECT
No. 3086
ARKANSAS

11-24-20

**Revisions:**

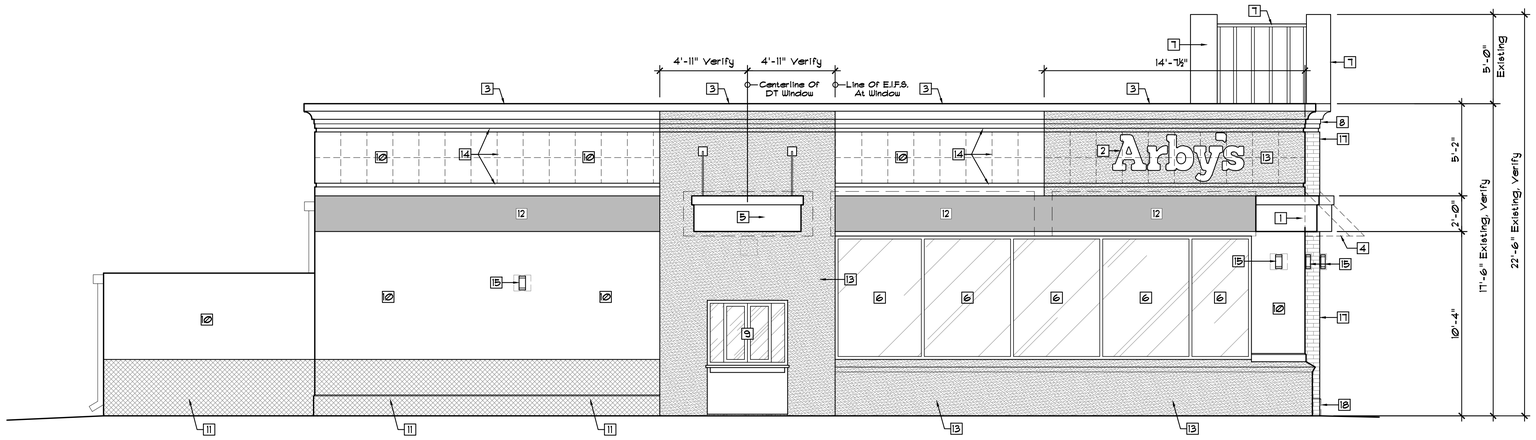


## South Elevation

A / A202 Scale: 1/4"=1'-0"

### PREFABRICATED CANOPY NOTES

The Prefabricated Canopy Manufacturer Shall Be Responsible For The Proper Design & Engineering Required For The Construction And Installation Of The Canopies. The Canopy Manufacturer Shall Provide Fully Engineered Connection Details Sealed And Signed By A Structural Engineer Licensed And In Good Standing In Arkansas. The Design Documents Shall Indicate The Existing Conditions Accurately And Be Submitted To The Building Official, Architect, And Owner Prior To Starting Of Any Construction.

### ACCESSIBILITY KEYNOTES

1. Grab Bars - 1 1/2" Dia. Mounted 1 1/2" Out From Wall Surface. Provide Adequate Blocking And Connection To Support 250 lbs Of Force. Provided & Installed By General Contractor.
2. Water Closet @ 17" to 19", Measured To Top Of Seat.
3. Toilet Paper Dispenser, By Owner.
4. Paper Towel Dispenser, By Owner.
5. Soap Dispenser, By Owner.
6. Plate Glass Mirror, Bobrick "513", Provide Mounting Indicated To The Reflective Surface Of The Mirror, By G.C.
7. Wall Hung ADA Lav., Ref.: Plumbing Fixture Schedule.
8. Provide ADA Compliant Lav. Protective Enclosure For Drain Pipes. LAV SHIELD - Mdl.#2018, Or Pre-cut Mdl. As Applicable.

*The Contractor Shall Field Verify The Existing Facilities For ADA Compliance & Rectify Any Areas Of Non-Compliance

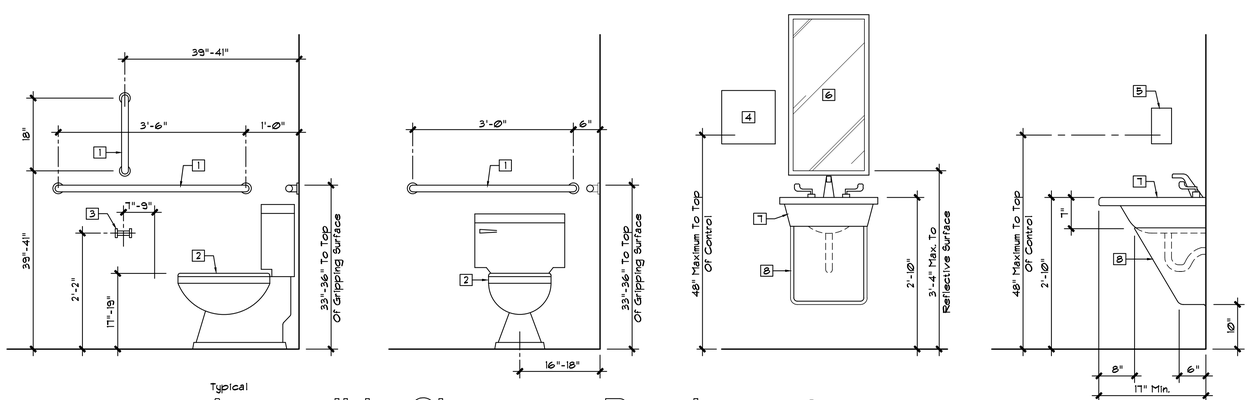


Typical

## Accessible Clearance Requirements

B / A202 Scale: 3/4"=1'-0"

## Signage Note

1. All Signage Work Shall Be Performed Under A Separate Permit.

## General Notes

1. The Contractor Shall Not Perform Any Structural Demolition Prior To Field Verification From The Structural Engineer.
2. These Drawings Represent An Approximation Of Exist. Conditions. The Contractor Shall Notify The Architect Of Any Discrepancies Immediately Upon Uncovering Of The Existing Structural Conditions.
3. All Exterior Surfaces Shall Be Cleaned, Patched, Repaired As Required And Prepared To Receive New Paint Per Drawings And Utilizing Arby's Paint Specifications.
4. The Contractor Shall Provide Blocking For Signage As Directed By Suppliers.
5. The Contractor Shall Provide All Flashing, Assemblies, Details, Etc.
6. Verify And Maintain All Existing Roof Drain/Downspout Assemblies.
7. The Contractor Shall Provide All Necessary Details As Required By The E.I.F.S. Manufacturer In Order To Maintain The Warranty. Provide All Backer Rods, Sealant Locations, Flashing Minimum Coverages, Etc.
8. Provide Dryvit E.I.F.S. System Or Approved Equal, System To Have A Water Management System With Appropriate Details. Provide Submittal With Proposed System And Details Indicated. All E.I.F.S. Work Shall Be Performed Per Manufacturers Requirements To Maintain Warranty.
9. The Contractor Shall Review All New E.I.F.S., Paint & Coping Cap Colors And Their Locations With The Owner Prior To Proceeding With The Work.

## Paint Legend

- PAINT COLOR #1
  Sherwin Williams #7005 "Pure White". Satin Finish, Prepare And Prime As Required.
- PAINT COLOR #2
  Sherwin Williams #2808 "Rookwood Dark Brown". Satin Finish. Prepare & Prime As Required.
- PAINT COLOR #3
  Sherwin Williams #6869 "Stop". Satin Finish. Prepare & Prime As Required.
- PAINT COLOR #4
  Sherwin Williams #7024 "Functional Gray". Satin Finish. Prepare & Prime As Required.

## Keynote Schedule

| Mark | Description |
|---|---|
| 1 | New 2'-0"H. Metal Signage Band, Red, By Owner. Contractor To Coordinate Installation. |
| 2 | New 2'-0"H. Backlit Signage By Owner, At Existing Location, White Lettering On Brown E.I.F.S. Field, Red Lettering On White E.I.F.S. Field, Contractor To Coordinate Installation. |
| 3 | Existing Prefinished Metal Coping To Remain, Paint Color #3 Red, Patch And Repair As Required, Refer: Exterior Finish Notes. |
| 4 | Existing Backlit Awning To Be Cleaned Or Re-Covered As Required, Verify w/Owner, Replace Existing Lamp With New LED Lamp, Refer: Reflected Ceiling Plan, Typical. |
| 5 | New Prefabricated Canopy. Provided And Installed By Canopy Manufacturer. Contractor To Provide New Support Blocking And Coordinate Installation. |
| 6 | Existing Glazing Unit To Remain, Typical. Clean Frames, Replace Broken Seal Units, Typical. |
| 7 | Existing Prefinished Sloped Metal Roofing & Framing To Remain, Paint Color #3 Red. Refer: Exterior Finish Notes. |
| 8 | New Prefinished Metal Coping Color #1. Refer: Exterior Finish Notes. |
| 9 | Existing Drive-Thru Window To Remain, Repair Hardware As Required. |
| 10 | Existing E.I.F.S. Wall Surface, Patch And Repair As Required, Paint Color #1, Refer: Exterior Finish Notes. |
| 11 | New Painted Wainscot Over Existing Masonry & E.I.F.S, Patch And Repair As Required, Paint Color #4. Refer: Exterior Finish Notes. |
| 12 | New Painted Accent Band Over Existing E.I.F.S., Patch And Repair Wall Surface As Required, Paint Color #3. Refer: Exterior Finish Notes. |
| 13 | Existing Brick Wainscot To Remain, Patch And Repair As Required, Paint Color #2, Refer: Exterior Finish Notes. |
| 14 | Existing E.I.F.S. Cornice, Reveals, And Ceramic Tiles To Remain. Prepare As Required And Paint Over. |
| 15 | New LED Exterior Performance Wall Sconce At Existing Location, Refer: Light Fixture Schedule. |
| 16 | Existing Collector Heads, Downspouts And Gutter System To Remain. Prepare & Paint: Color #1. |
| 17 | New E.I.F.S. Finish W/Brick Stencil Pattern, Color #1, Over Existing E.I.F.S. Remove Decorative Tiles, Skim And Fill Existing Field Of Reveals Around Sign. Refer: Exterior Finish Notes. |
| 18 | Existing E.I.F.S. Base Trim To Be Removed. Continue E.I.F.S. With Brick Stencil Straight Down To Bottom. |

White Design Group, P.C.
Restaurant and Interiors Consulting
5801 EAST 41ST STREET, SUITE 712, TULSA, OKLAHOMA 74135

New Remodel For:
Arby's #7004 - 2321 N. Arkansas Ave.
Russellville, Arkansas

**Sheet Content**
Building Elevations, Accessible Clearance Req'mts., Signage Note, General Notes

**Sheet Number**
A202
Date: 11-24-20