Serial Number
of this Manual

358

U. S. NAVY
Bureau of Ships

SUBMARINE PERISCOPE TYPE 4

(Design Designation 93KN36)

Registry No._____

DECLASSIFIED TO: Unclassified
DATE: 19 May 76
AUTHORITY: NSSC letter dated 15 Apr 1976

Manufactured by
KOLLMORGEN OPTICAL CORPORATION
2 Franklin Avenue Brooklyn 11, New York

1944

Serial Number
of this Manual

U. S. NAVY
Bureau of Ships

SUBMARINE PERISCOPE TYPE 4

(Design Designation 93KN36)

Registry No. _____

CONFIDENTIAL

This Manual is considered confidential within the meaning of U. S. Code, Title 50, Section 31, and all persons having access hereto are warned against unauthorized disclosure of the contents hereof.

Manufactured by
KOLLMORGEN OPTICAL CORPORATION
2 Franklin Avenue Brooklyn 11, New York

1944

PART ONE

Note: Attention is invited to the Manual of the Bureau of Ships, regarding the necessity for and the procedure to be followed in the case of all repair work which involves breaking the hermetical seal of the periscope.

GENERAL DESCRIPTION

The submarine periscope type 4 is a night-service instrument of 36 foot nominal length and 7½ inch outer diameter. It is equipped with a tilting head prism capable of elevating or depressing the line of sight, permitting the user to compensate for the roll or pitch of the vessel. The optical elements are treated to increase the light transmission. The instrument is designed for high-power and low-power observation, and is supplied with a built-in ST radar antenna. The principal characteristics of the periscope are as follows:

Magnification	Lower Power	1.5x
	High Power	6.0x
True Field of View	Low Power	32°
	High Power	8°
Maximum Elevation of Line of Sight (Above Horizontal)		45°
Maximum Depression of Line of Sight (Below Horizontal)		10°
Maximum Elevation of Edge of Field (Above Horizontal)	Low Power	61°
	High Power	49°
Diameter of Exit Pupil (Both Powers)		7 mm.
Overall Length of Periscope		37′ 2¼″
Optical Length		36′
Outer Diameter of Body Tube		7½″
Minimum Outer Diameter of Reduced Section		3¾″
Maximum Diameter of Hoisting Yoke (Winch Type Hoist)		14¾″
Maximum Diameter of Other External Projections		13½″
Net Weight of Periscope		2000 lbs.
Material of Body Tube	Corrosion Resisting Steel	
Material of Reduced Section	Corrosion Resisting Steel	

SHIPPING, UNPACKING AND HANDLING

The modern submarine periscope is of necessity a fragile instrument, especially during handling and shipment. It is shipped in a box of sturdy construction, but to avoid needless stresses it is advisable that the box, whenever possible, be hoisted or supported at more than one point, preferably the quarter-points. During rail shipments the box should be securely chocked in the car. A reach truck is desirable for highway movements, and in any case the box should be loaded so that the portion overhanging the truck contains the upper and lighter end of the periscope. The name plate of the shipping box is placed at the end containing the lower and heavier portion of the periscope.

The periscope is secured in the box by chocks, with brass clamps provided to prevent endwise movement in the box. The clamps should remain with the box for reuse. The cover of the box, when inverted, serves as a convenient support for the instrument.

In the case of reshipment of the periscope, care should be taken that the brass clamps are in place, and that all accessories are either mounted on the instrument or secured inside the box.

INSTALLATION AND REMOVAL

Before installing the persicope it is necessary to remove all parts projecting beyond the 7½″ diameter. Reference should be made to Plate I, and all screws indicated thereon *by number* should be removed, and the parts thereby detached. At the time of removal of the training handles and focussing knob, the markings on the squared shafts should be noted, to permit reassembly in their original positions. The internal pressure gauge should not be disturbed, otherwise the hermetical seal of the periscope will be broken. A list of the parts to be removed follows.

Training Handles—Remove by taking out screws P-1161-7.

Focussing Knob—Remove by taking out screws P-1506-51.

Face Plate—Remove by pulling outward the two spring-actuated knobs P-1438-4 as far as possible.

Bottom Eyepiece Box Flange—Remove by taking out screws P-1495-7. The rectangular opening of the antenna input assembly is covered with a small piece of adhesive tape to exclude dirt and moisture from the assembly. This tape should remain in place until after the periscope is installed.

Eyepiece Box Attachments –Any eyepiece box attachment mounted by means of clips on pins projecting from the eyepiece box itself should be removed. The pins should not be removed.

Hoisting Yoke –The two fastening screws P-1326-4 holding cover ring P-1326-2 in place are removed and the cover ring is unscrewed. The hoisitng yoke can then be removed by sliding it over the eyepiece box, tapping lightly if necessary. The split ring P-1326-3 is then removed. The hoisting yoke ball bearing parts should be kept clean at all times.

The periscope should be hoisted for installation by means of a clamp of ample proportions with an accurate bore. A bronze or bronze-lined clamp is preferable, although a steel clamp may be used. The clamp should be hung from two chains of sufficient length and provided with a spreader to prevent contact with the head and reduced section. A print of the preferred form of hoisting clamp and sling will be furnished by the periscope manufacturer upon request. The clamp should be placed around the body tube at least 12 inches below the joint between the tube and the reduced section. One or two safety clamps (the brass clamps supplied with the shipping box will serve) should be secured above the hoisting clamps. Under no circumstances should poorly-fitting clamps, or clamps containing set-screws, be used, nor should any clamp be placed directly over the joint between the body tube and the reduced section, otherwise severe damage to the periscope might result.

After insertion of the periscope the parts should be replaced in the inverse order. The hoisting yoke should be attached by reassembling the parts in the inverse order,

starting with the split ring. The cover ring should be screwed home, and then backed off sufficiently to permit the holes for the fastening screws to come into alignment. The hoisting yoke should then be filled with grease through the pressure fitting provided. It should be noted that the hoisting yoke is self aligning to compensate for small differences in the length of the hoisting cables. In the case of periscopes to be equipped for hydraulic hoisting, see manufacturer's drawing P-1518 (BuShips S-2409-657520) for hoisting yoke assembly.

The bottom of the eyepiece box and both surfaces of the flange plate should be cleaned of grease, dirt and moisture. The short piece of adhesive tape covering the rectangular opening of the antenna input assembly should be removed and the flange reattached to the eyepiece box. Unless the Radar assembly is to be attached immediately, the opening through the flange plate should be temporarily closed with tape to prevent the entrance of moisture.

The removal of the periscope from the vessel is accomplished in a manner similar to that prescribed for installation.

CARE OF PERISCOPE

The periscope should be hoisted and inspected daily, even while in port, by a qualified officer, to make sure that it is in good working order, optically and mechanically. The head window, eyepiece window, and ray filters should be cleaned as often as necessary using lens paper or clean, lint-free cloth. If necessary the paper or cloth may be moistened with alcohol to remove grease. Unnecessary cleaning should be avoided. A grease fitting is provided in the hoisting yoke. Soft water-pump grease should be added occasionally, mainly to protect the internal parts against the entrance of water.

The most frequent cause of periscope failure in normal service is the fogging of the optics due to internal moisture, resulting principally from gas leakage causing low internal pressure accompanied by the "breathing" action of the periscope during temperature changes. The periscope, when new, is charged with dry nitrogen-air mixture at a pressure of 7½ pounds per square inch at 70° F. The pressure gauge should be checked at frequent intervals. A pressure between 5 and 7 pounds is normal; one between 2 and 5 pounds indicates that the periscope should be recharged at the first opportunity. Recharging should not be attempted aboard the ship unless the proper supplies and equipment are available (see under "Drying and Recharging" in Part II). A pressure of less than 2 pounds denotes a dangerous condition, and may indicate that the periscope is "breathing" and hence likely to become fogged internally without warning. A satisfactory pressure reading does not of itself preclude the possibility of fogging, unless it is known that the periscope has been dried or recharged and tested by an approved method. Compressed air should never be fed into a periscope in an effort to prevent or overcome fogging.

A persistent loss of pressure in the periscope, or the excessively free movement of any operating shaft on the eyepeice box, should be cause for an investigation into the tightness of the packing glands. Packing glands are located under each training handle bracket, under the focussing knob bracket, and under the movable plate which carries the hinged face plate. A typical gland is shown on Plate V. A gland that is known to

be leaking may be taken up by loosening the locking screw, P-1422-7 or P-1506-43 and tightening the gland nut adjacent to the shaft, using for this purpose the pin wrench furnished in each periscope spare part box.

When the periscope is cold, a temporary fogging of the outside of the eyepiece window may occur as a result of moisture in the observer's breath. The condensation may easily be wiped off by opening the face plate, and the phenomenon will cease when the instrument becomes warmer.

OBSERVING WITH PERISCOPE

The observer should determine the best focus for his eye, and make the proper setting on the diopter scale, located on the hub of the focussing knob, before starting observation.

The power shift is operated by the right training handle grip, which should be rotated to the limit of its travel in each position. The prism tilt is operated by the left training handle grip. This training handle is equipped with a spring detent to hold the line of sight horizontal. The detent may be rendered inoperative by rotating the knurled head.

The eyeguard attachment is removable, and may be inverted for left eye observation. Removable red, yellow and green ray-filters are provided for various conditions of observation. They will be found either in the tool box or in the rayfilter stowage case attached to the eyepiece box. The filters are mounted in threaded cells which may be screwed into the opening in the eyeguard attachment. A removable variable-density filter is furnished, which, when set for maximum light transmission, also serves as a polarizer to eliminate glare from the surface of the sea.

Each large division on the telemeter scale corresponds to an angle of 1° at high power, and 4° at low power. Each subdivision corresponds to an angle of 15′ at high power, and 1° at low power.

SPARE PARTS AND TOOLS FOR VESSEL

The following parts are contained in the spare part and tool box supplied to the vessle with each periscope:

Quantity	*Name*	*Part No.*
2	Rubber Eye Buffer	P-1134-9
1	Blinder Attachment	P-1414-6-7-8-9
4	Screws	P-1171-6
8	Screws	P-1161-7
4	Screws	P-1506-51
4	Screws	P-1326-4
5	Screws	P-1495-7
3	Mounted Ray Filters (except when supplied in separate stowage case)	P-1513-3-4
1	Air Valve Connection	P-1410-6

(*Continued*)

1	Adjustable Pin Wrench	P-1423-3
1	Packing Gland Wrench	P-1423-5
1	Copy of Instruction Pamphlet (shipped separately).	
1	Socket Wrench, 5/8" Hex. x 3/4" Hex	P-1448-1
1	Lock for box with 5 keys.	

PART TWO

Note: Attention is invited to the Manual of the Bureau of Ships, regarding the necessity for and the procedure to be followed in the case of all repair work which involves breaking the hermetical seal of the periscope.

LIST OF DRAWINGS
Design Designation 93-KN-36

Title	*K. O. C. No.*	*Bu. Ships No.*
List of Parts Used on 93-KN-36 (Sheet 1 of 2)	P-1469	S2409-697450
	Sheet	1 of 2
List of Parts Used on 93-KN-36 (Sheet 2 of 2)	P-1469	S2409-697450
	Sheet	2 of 2
Assembly of Periscope, Upper Part	P-1470	S2409-697451
Assembly of Periscope, Middle Part	P-1471	S2409-697452
Assembly of Periscope, Lower Part	P-1472	S2409-697453
Eyepiece Box	P-1473	S2409-697454
Assembly of Optics	P-1474	S2409-697455
Details of Optics	P-1475	S2409-697456
Details of Skeleton Head	P-1476	S2409-697457
Upper Skelton Head	P-1477	S2409-697458
Details of Skeleton Head Parts	P-1478	S2409-697459
Outer Taper	P-1479	S2409-553337
Outer Head	P-1480	S2409-697460
Details of Head Windows	P-1481	S2409-697461
Miscellaneous Details	P-1482	S2409-697462
Layout of Outer Tube	P-1483	S2409-553336
Objective Mount	P-1484	S2409-697463
Objective Coupling	P-1485	S2409-697464
Miscellaneous Details	P-1486	S2409-697465
Inner Tube	P-1487	S2409-697466
Bottom Eyepiece Box Flange	P-1488	S2409-697467
Inner Tube	P-1489	S2409-697468
Eyepiece Skeleton Connection	P-1490	S2409-697469
Details of Skeleton Head Parts	P-1491	S2409-697470
Details of Skeleton Head Parts	P-1492	S2409-697471
Details of Skeleton Head Parts	P-1493	S2409-697472
Details of Counterweight	P-1494	S2409-697473
Miscellaneous Details	P-1495	S2409-697474
Eyepiece Skeleton	P-1496	S2409-697475
Details of Antenna	P-1497	S2409-697476
Brackets for P-1497	P-1498	S2409-697477
Housing for Spiral Drive	P-1499	S2409-697478
Spiral Drive Details	P-1500	S2409-697479
Inner Tubes, Reduced Section	P-1501	S2409-697480
Stuffing Box for Training Handles and Focusing Mechanism	P-1502	S2409-697481
Stuffing Box for Rayfilter Movements	P-1503	S2409-697482
Universals, Bearings and Miscellaneous Details	P-1505	S2409-697483
Screws, Washers, Gaskets and Pins	P-1506	S2409-697484
Details of Training Handles	P-1509	S2409-697485
Details of Training Handles	P-1510	S2409-697486
Eyepiece Mechanism Details	P-1511	S2409-697487
Rayfilter Main Body Castings	P-1512	S2409-697488
Blinder and Rayfilter Attachment Details	P-1513	S2409-697489

LIST OF DRAWINGS –Continued
Design Designation 93-KN-36

Title	*K. O. C. No.*	*Bu. Ships No.*
Assembly and Details of Diaphragms	P-1514	S2409-697490
Antenna Array and Taper	P-1516	S2409-697491
Details of Upper Reduced Section	P-1521	S2409-697492
Details of Upper Reduced Section	P-1522	S2409-697493
Miscellaneous Details	P-1523	S2409-697494
Box for Spare Parts and Tools for Repair Shop	P-1524	S2409-697495
Box for Spare Parts and Tools for Repair Shop	P-1525	S2409-697496
Box for Spare Parts and Tools for Vessel	P-1526	S2409-697498
Pressure Gauge	P-1454	S2409-697497
Details of Training Handles	P-1069	194985
Details of Periscope	P-1133	223891
Details of Rayfilter	P-1134	223892
Details of Training Handles	P-1157	237746
Details of Focussing Mechanism, etc.	P-1160	237749
Miscellaneous Details	P-1161	237750
Miscellaneous Details	P-1163	237752
Details of Stadimeter Mechanism	P-1171	237760
Lower Prism and Window Mounts	P-1173	237762
Details of Counterweight Mechanism	P-1177	237766
Miscellaneous Details	P-1314	350246
Coupling Details	P-1318	385189
Hoisting Yoke with Self Aligning Ball-Bearing Assembly	P-1325	549622
Details of Hoisting Yoke	P-1326	549623
Details of Hoisting Yoke	P-1327	549624
Miscellaneous Details	P-1353	365230
Power and Prism Shifting Racks	P-1403	549594
Stuffing Box Details	P-1405	549596
Stuffing Box Details	P-1406	549597
E. P. Window Frame and Miscellaneous Details	P-1408	549599
Details of Periscope	P-1409	549600
Air Valve Details	P-1410	549601
Details of Rayfilter	P-1412	549603
Details of Rayfilter	P-1413	549604
Assembly and Details of Blinder Attachment	P-1414	549605
Assembly and Details of Variable Filter Attachment	P-1415	549606
Details of Variable Filter Attachment	P-1416	549607
Eyeguard for Variable Filter and Miscellaneous Details	P-1417	549608
Special Tools for Periscope	P-1423	549614
Details of Name Plate	P-1430	549626
Details of Rayfilter Housing Hinge	P-1438	549633
Tools for Periscope	P-1447	622544
Miscellaneous Details	P-1448	622545
Upper Prism Stop Details	P-1420	549611
Upper Prism Stop Details	P-1421	549612

DRYING AND RECHARGING

Whenever fogging takes place on the internal optical surfaces of a periscope, or whenever the hermetical seal of the instrument is broken for any reason, the periscope must be dried before being returned to service. The recommended method of drying follows:

The method consists of:

A high vacuum pump, "Cenco Hyvac", or equal.
A high vacuum gauge "Stokes Portable McLeod", or equal.
A supply of solid carbon dioxide.
A supply of acetone, technical grade.
A supply of dry nitrogen.
A thermometer calibrated to −100° C.
A cold trap, as described.
A dew point tester, as described.
A fixture for evacuating the input plug, as described.

The use of a filter in the charging line is strongly recommended. A successful form of filter is a sintered bronze "Porex" disc obtainable from Moraine Products Division, General Motors Corporation, Dayton, Ohio. The disc is mounted in a suitable housing similar to that used in gasoline lines. Filters using absorbent cotton or other filtering material are equally serviceable, provided the filtering material is kept clean and dry.

The cold trap, dew point tester and fixture for evacuating the input plug are shown on Plate VI. The cold trap consists preferably of a Dewar flask of Pyrex glass of 1 quart capacity. About 15 feet of copper tubing is tightly coiled to fit inside the flask. The freezing mixture consists of 1 pint of acetone to which 3 pounds of solid carbon dioxide is added slowly. The dew point tester is a small Erlenmayer flask, with the bottom externally silvered. A Pyrex beaker of 1 quart capacity is required to contain the freezing mixture used in making the dew point test. The mixture consists of 1 pint acetone to which ½ pound solid carbon dioxide is added a little at a time, so as to effect a gradual reduction in temperature. The fixture for evacuating the input plug is a cup shaped receptacle with fittings for hose connections to the vacuum pump and and McLeod gauge.

The periscope should first be subjected to an internal pressure test, introducing nitrogen slowly over a two-hour period through the air inlet valve until a pressure of 100 pounds is reached. The instrument should then be soaped or preferably immersed in water, and minutely examined for leaks, particularly through packing glands. All leaks must be eliminated, otherwise the high vacuum cannot be obtained. Wax should not be used to stop leaks, except as a seal over the stems of the air valves.

The pressure is then slowly released over another two-hour period, and the air outlet valve of the periscope connected to the vacuum pump through the minimum practicable length of hose. The vacuum gauge is similarly connected to the air inlet valve. The pump should be operated until a vacuum of preferably 2 mm. of mercury absolute (and in no case more than 4 mm.) is attained. From three to six hours is usually required to obtain the desired vacuum. If only an insufficient vacuum is obtained, which fails to improve with continued pumping, it may be assumed that leaks are present.

When the required vacuum is reached, the vacuum line should be closed and the periscope allowed to stand for three hours or more. If a slight rise in pressure occurs it will be caused by residual moisture, and further pumping will be required, following which the vacuum line may be removed and replaced with the nitrogen supply line for final charging.

The cold trap must be placed in the line between the nitrogen flask and the periscope. The filter is desirable between the cold trap and the periscope to trap entrained water and dust particles. The freezing mixture in the cold trap should attain a temperature of approximately − 78° C. before charging commences. The periscope is charged by feeding nitrogen slowly through the cold trap and into the periscope inlet until the periscope attains an internal pressure of 10 pounds.

The dew point tester must be dried by evacuating before each use. Following the charging of the periscope the tester should be connected to the air outlet valve and gas from the periscope should be admitted to the tester at such rate that the current can just be perceived if the outlet of the tester is held to the lips. The temperature of the freezing mixture is progressively reduced by the addition of solid carbon dioxide. The temperature should be noted at which the first trace of condensation occurs on the silvered surface of the dew point tester. A close watch must be kept to detect the first change in the reflective quality of the silvered surface as it is easily possible to get a reading several degrees lower than the true value. A dew point at or below − 50° C. is satisfactory; in case a higher dew point is noted the vacuum should be repeated and the periscope recharged. Following the dew point test the gas in the periscope in excess of a pressure of 7½ pounds should be bled off and all valves on the instrument closed.

During the 100 pound internal pressure test of the periscope water will enter that portion of the antenna input plug external to the input window. The rectangular opening to the input plug must not be sealed during this test, as otherwise leaks around the input window gaskets could not be detected. The water is best removed from this assembly by evacuation. The fixture described is connected to the vacuum pump and the McLeod gauge and is placed centrally over the input plug and sealed with a fillet of wax around the outer edge. As soon as sufficient vacuum has been drawn the fixture will remain in place without support. A vacuum of 2 mm. of mercury should be drawn and held for approximately six hours. This operation may conveniently be performed concurrently with other portions of the drying procedure for which the vacuum pump is not required.

In the case of a periscope which in service has lost some of its pressure, recharging only may be necessary. The dew point should be checked to determine that no mositure has entered, and the instrument should be examined for hermetical tightness. Nitrogen dried in the manner previously described, may be introduced until a pressure of 10 pounds is reached. Another dew point test should be made and the pressure reduced to 7½ pounds.

The greatest care must be taken to avoid introducing dust, dirt, or moisture into the periscope. All apparatus used must be kept clean and employed for no other purpose. The cold trap and vacuum lines should be blown out before each use with a strong jet from the dry nitrogen cylinder. Hose lines should be as short as possible

and joints hermetically tight. In instances where periscopes are dried or recharged in place on the vessel, all equipment should be available on board. Long lines for dry gas or vacuum should not be used under any circumstances.

DISASSEMBLY- Refer to Plates II, III and IV

The Type 4 periscope can be disassembled with a minimum of difficulty. The entire inner assembly, with the eyepiece box attached, can be withdrawn as a unit, without breaking any seal except the main coupling, and without removing any sealing windows. It is recommended in the case of minor repairs that disassembly proceed no farther than is required to effect such repairs. The procedure is as follows: The internal gas pressure should be released and the set screws P-1511-3 on the main coupling loosened. The periscope should, preferably, be placed in low power and the head prism turned to its horizontal position. The main coupling P-1486-2 is then unscrewed. This coupling has a right hand thread on the body tube and a left hand thread on the eyepiece box. Care should be taken not to damage the gasket P-1511-4 at this joint. The entire inner assembly may then be withdrawn. During this operation the assembly must be supported to avoid bending any of the sections. If it is desired to reach merely the eyepiece box mechanism, the inner assembly should be withdrawn only a few inches.

Before the eyepiece box can be detached, it is necessary to remove all connections with the inner assembly. The eyepiece box is first stripped of external parts as described under "Installation". The movable plate P-1512-2 which carries the hinged face plate, should be removed by taking out the screws P-1506-42 and detaching the gibs P-1512-3. All packing glands should be removed as units with the short shafts passing through them. The eyepiece window frame P-1511-1 is detached by removing the screws P-1506-46A & B and the eye lens mount P-1511-2 unscrewed. The screws P-1495-5 which hold the eyepiece box to the inner section P-1496-1 are then removed. The eyepiece box is then free and should be passed carefully over the inner assembly.

The inner tube may be disassembled by removing the power shifting tapes and the antenna wave guide and array. (The openings in the wave guide and array should be kept covered with adhesive tape until ready for reassembly.) The long shaft actuating the prism tilt may be disconnected by removing the taper pins at any of the universal joints. The small ends of the taper pins are split and spread to prevent dislodgment. The air lines are provided with slip joints at various locations. The couplings of the inner tube may be separated whenever desired by removing the fastening screws. The antenna input assembly (P-1497-1) and parts attached thereto, should not be disassembled unless facilities are available for electronic testing. If leaks are present in the gaskets in which the input window is mounted an effort may be made to correct them by tightening the mounting screws slightly. If this is not successful then the input assembly should be removed as a unit and replaced with a tested assembly.

Precaution must be taken to avoid damage to the antenna array and wave guide, particularly the denting of surfaces or the burring of apertures.

CLEANING AND RENEWAL OF PARTS

Optical surfaces may be cleaned with alcohol and wiped with lens paper or Selvyt cloth. Care must be used to avoid scratching the scale or the upper surface of the eyepiece prism, as such scratches will be visible in the field of view. Alcohol must not be used on silvered surfaces, as it may soften the lacquer and expose the silver to damage.

When optical parts are renewed or reassembled, they must be seated firmly in their mounts, but without strain.

REASSEMBLY AND ADJUSTMENT

When reassembling, proceed generally in inverse order to that given under "Disassembly". The prism tilting mechanism must work freely without stutter, binding or back-lash. The tapes actuating the power shift should be adjusted with sufficient tension to obtain a firm action of the mechanism. When shafts and gears are replaced, care should be taken to match the original markings of all mating parts. When replacing the eyepiece box it is not necessary to remove the antenna input assembly from the box. The wave guide may be manually guided into the rectangular opening in the input assembly. For this purpose the opening for the packing gland on the focussing knob shaft should be used.

After the reassembly is completed the periscope should be dried and charged in the manner previously described. The internal pressure gauge on the eyepiece box need not be removed during disassembly nor during the pressure test. The gauge is constructed to withstand an internal pressure of 300 pounds. In case the pressure gauge is defective in operation, it is recommended that it be replaced with a spare gauge and sent to the factory for repairs.

CARE OF PACKING GLANDS

During any general overhaul, all packing glands on the instrument should be tightened, repacked if necessary, and pressure tested. All glands are of the type shown on Plate V, and use synthetic rubber packings. The glands should remain hermetically tight for longer periods than glands using braided packing. The method of tightening the glands is described under "Care of Periscope". If repacking is necessary new synthetic rubber washers (Hycar 1232 HCR-2) should be used. This material tends to swell after exposure to a lubricant. It is recommended that before being used the Hycar washers be soaked for one week in a grease such as Lubriplate 210, obtained from the Lubriplate Division of Fiske Bros. Refining Company, Newark, New Jersey. The excess grease is then carefully wiped off and a lubricant such as Glydag, obtained from Atcheson Oildag Company, Port Huron, Michigan, is then applied to the shaft and washers just before assembly of the packing gland. The packing gland should then be worked in by rotating the shaft on a lathe at a moderate speed for at least 1,000 turns. It is recommended that each packing gland be individually tested for pressure tightness prior to reassembly with the periscope.

CARE OF FLOODED PERISCOPES

When periscopes have been flooded and subsequently emptied of water, the resulting

corrosion will damage certain parts beyond repair, unless prompt counter measures are taken.

The following procedure, as stated in Buships ltr. SS/S 24-9 (815) EN 28/A2-11 of 4 Feb. 1943, is recommended:

(a) As soon as possible after flooding, flush with fresh water and dry thoroughly, if practicable. Then apply to the internal parts a rust preventive compound similar to Tectyl Grade III or No. 511.

(b) If Tectyl is not available, the periscope should then be sealed after flushing and left full of fresh water until repairs are effected.

SPARE PARTS FOR REPAIR SHOP

12	Screws	P-1506-1
2	Screws	P-1506-3
6	Screws	P-1506-4
24	Screws	P-1506-5
20	Screws	P-1506-7
12	Screws	P-1506-8
6	Screws	P-1506-9
6	Screws	P-1506-10
4	Screws	P-1506-12
2	Screws	P-1506-14
24	Screws	P-1506-15
28	Screws	P-1506-16
56	Screws	P-1506-17
16	Screws	P-1506-19
10	Screws	P-1506-20
28	Screws	P-1506-21
112	Screws	P-1506-23
384	Screws	P-1506-24
192	Screws	P-1506-25
4	Screws	P-1506-26
16	Screws	P-1506-27
24	Screws	P-1506-28
4	Screws	P-1506-31
8	Screws	P-1506-33
4	Screws	P-1506-34
44	Screws	P-1506-39
20	Screws	P-1506-40
8	Screws	P-1506-41
36	Screws	P-1506-42
10	Screws	P-1506-43
36	Screws	P-1506-44
8	Screws	P-1506-46A
16	Screws	P-1506-46B
36	Screws	P-1506-48
4	Screws	P-1506-49
24	Screws	P-1506-51
8	Screws	P-1506-53
16	Screws	P-1506-56
4	Screws	P-1506-58
4	Screws	P-1506-60
48	Screws	P-1161-7
8	Screws	P-1171-6
4	Screws	P-1326-4
6	Screws	P-1476-6
28	Screws	P-1495-5
10	Screws	P-1495-7
24	Screws	P-1498-7
24	Screws	P-1498-8
4	Screws	P-1511-3
2	Screws	P-1523-11
2	Gaskets	P-1353-6
2	Gaskets	P-1405-6
6	Gaskets	P-1406-7
2	Gaskets	P-1408-5
4	Gaskets	P-1481-3
4	Gaskets	P-1481-4
4	Gaskets	P-1481-5
4	Gaskets	P-1481-6
2	Gaskets	P-1488-2
2	Gaskets	P-1498-4
4	Gaskets	P-1498-5
48	Gaskets	P-1502-3
16	Gaskets	P-1503-3
2	Gaskets	P-1506-175
2	Gaskets	P-1506-176
2	Gaskets	P-1511-4
2	Washers	P-1409-5
4	Washers	P-1410-5
48	Washers	P-1502-2
16	Washers	P-1503-2
2	Washers	P-1506-150
2	Metal Tapes and Wires	P-1482-6
2	Air Valves, Complete	P-1410-1-2-3-4-5
2	Air Valve Connections	P-1410-6
4	Head Windows	P-1475-1
2	Eyepiece Windows	P-1475-12
4	Range Windows	P-1475-2
2	Head Prisms	P-1475-3
1	Built-in Type Pressure Gauge	P-1454-1
2	Antenna Arrays with Tapers	P-1516-4
2	Input Assemblies with Screws and Gaskets	P-1498-1
1	Set Microfilm of Plans (Furnished by Government in Sealed Container)	
1	Instruction Manual	
1	Box with Padlock and Keys	

USE OF SPECIAL TOOLS

The spanner wrench, with its extension handle, fits the main coupling between the body tube and the eyepiece box. The adjustable pin wrench fits the hoisting yoke cover ring and the air valves. The packing gland wrench fits the nuts of all packing glands. The clamp ring wrench fits all clamp rings holding lenses in place.

NOTES

NOTES

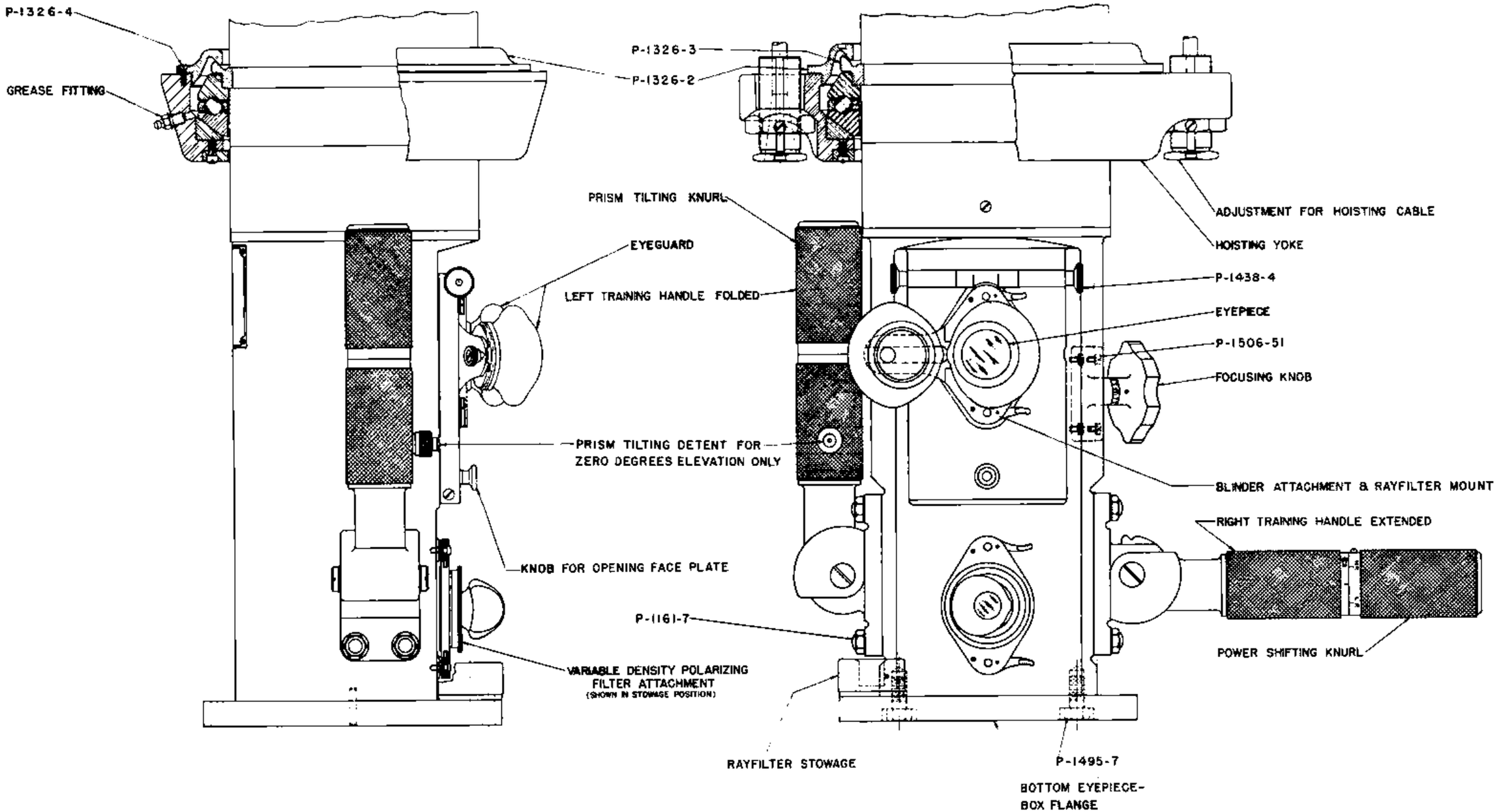

PLATE I—Outline Drawing of Eyepiece Box

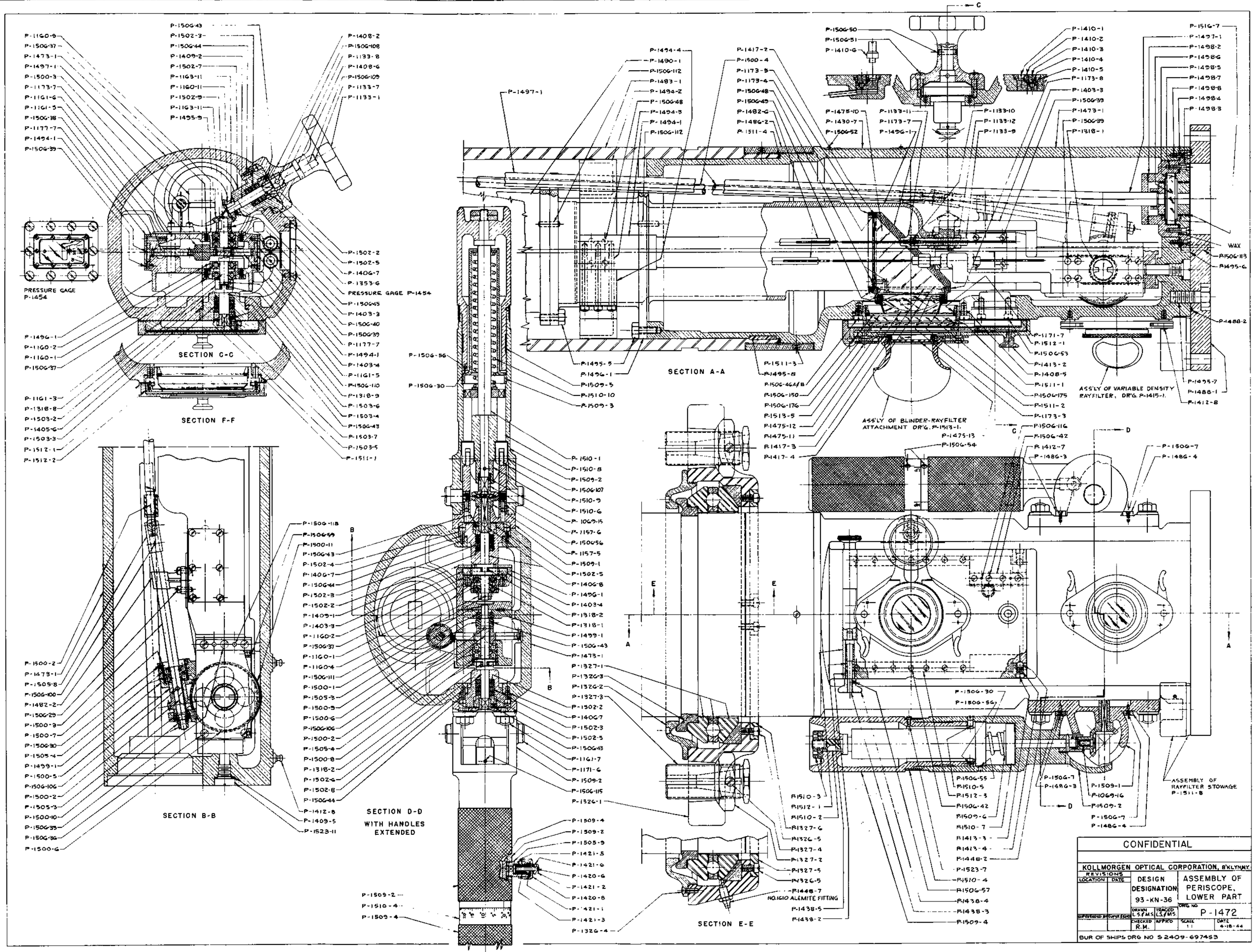

PLATE II—Assembly Drawing, Lower Part

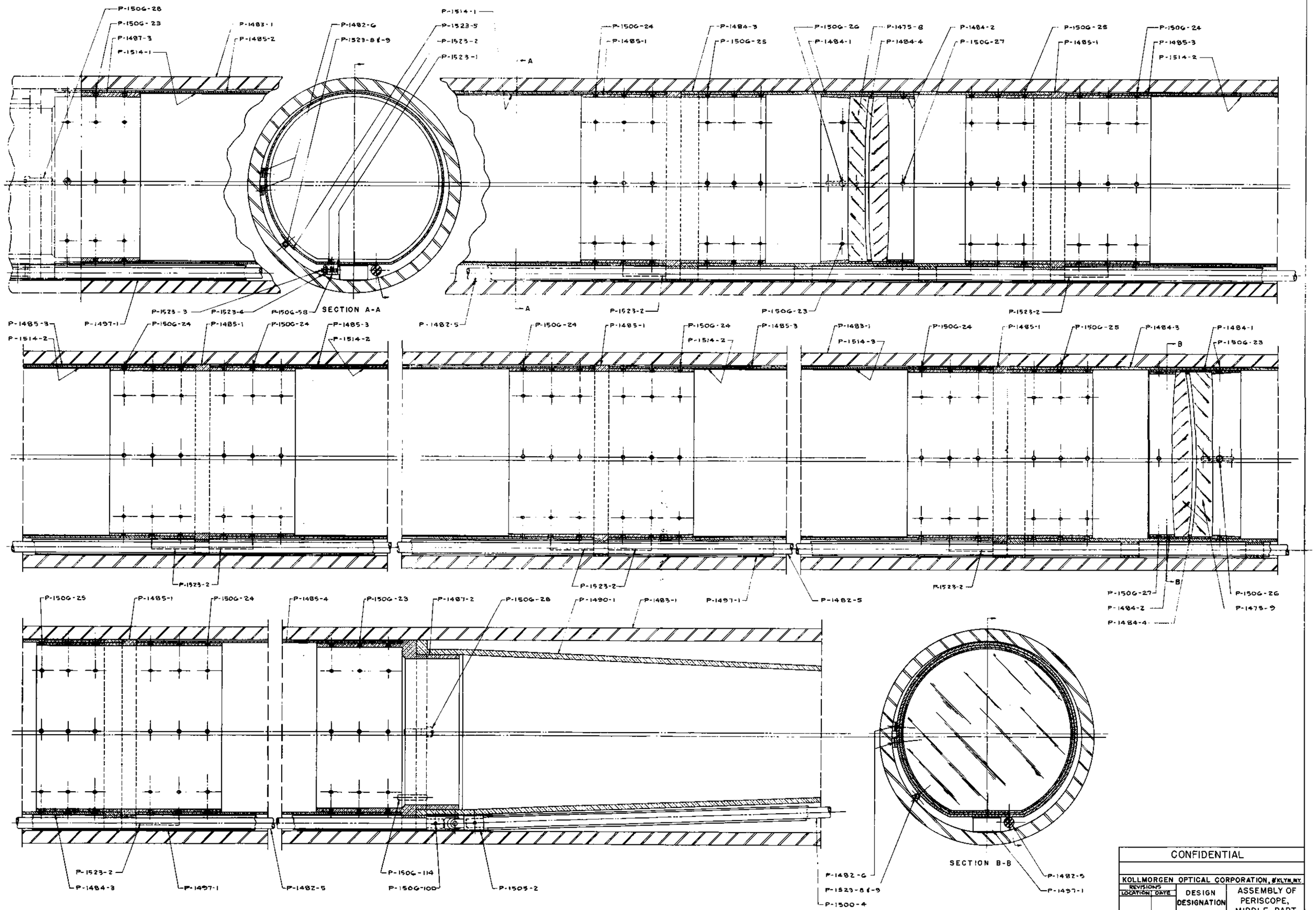

CONFIDENTIAL

KOLLMORGEN OPTICAL CORPORATION, BKLYN, NY.

REVISIONS LOCATION	DATE	DESIGN DESIGNATION 93-KN-36	ASSEMBLY OF PERISCOPE, MIDDLE PART
		DRAWN L.S. / TRACED D.S.	DRG. NO P-1471
		CHECKED R.M. / APP'D	SCALE 1:1 / DATE 6-28-44

BUR OF SHIPS DRG NO. S 2409-697452

PLATE III—Assembly Drawing, Middle Part

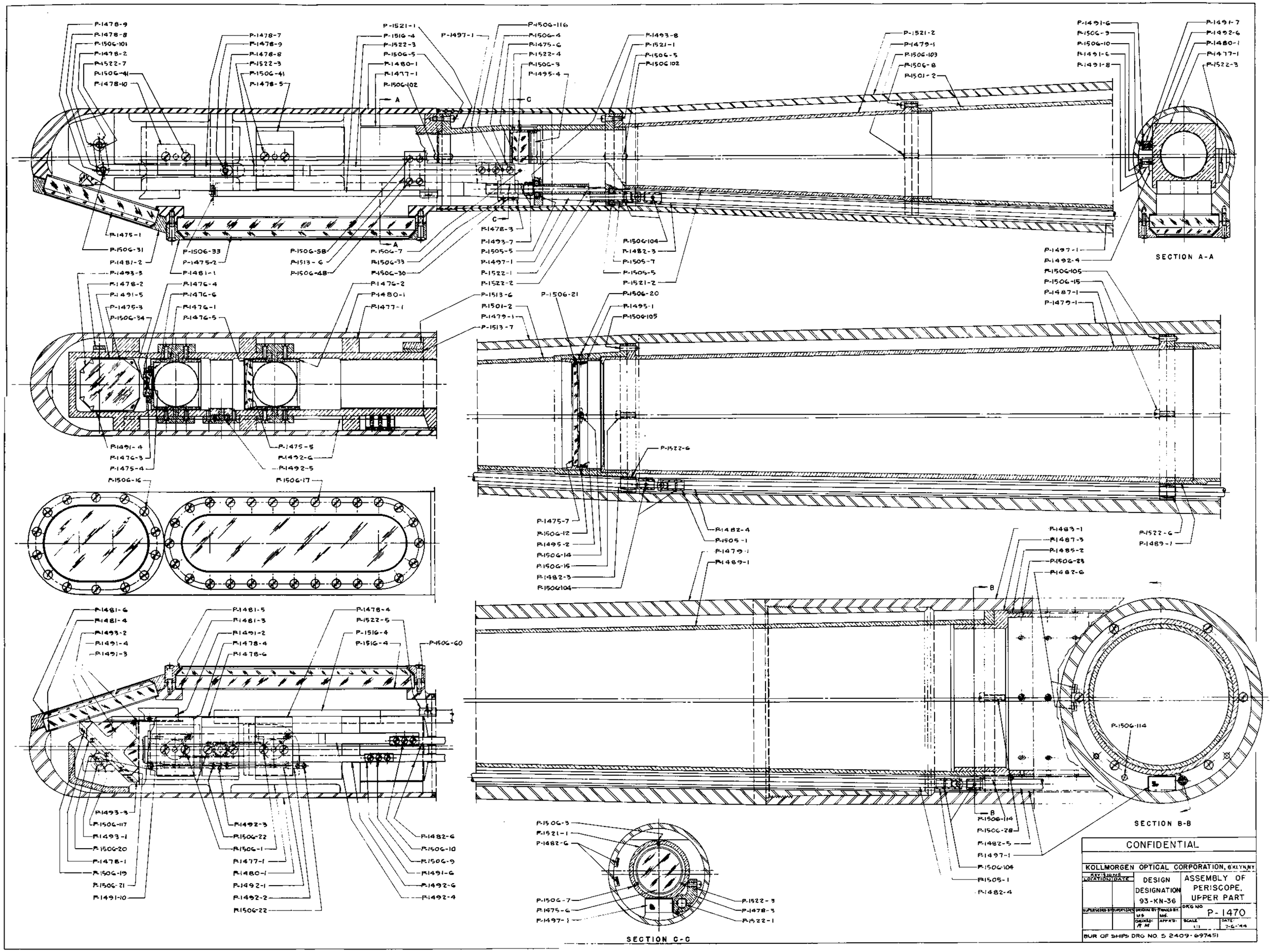

PLATE IV—Assembly Drawing, Upper Part

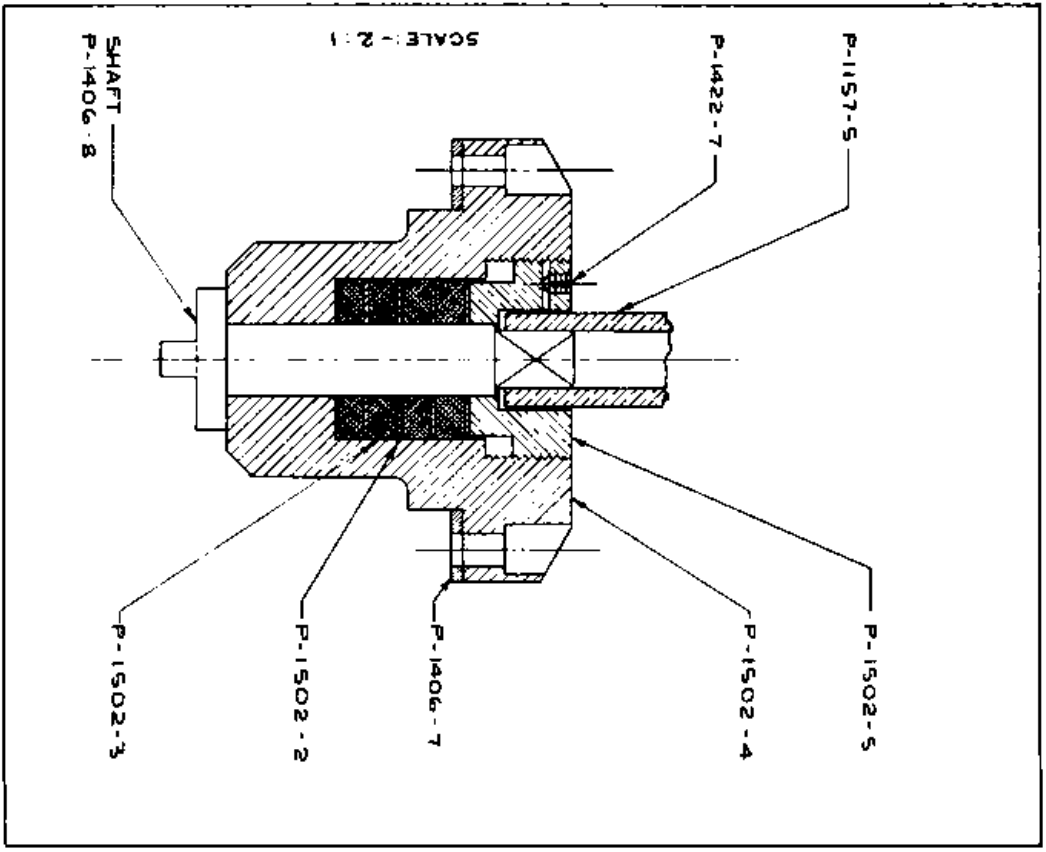

PLATE V—Section of a Typical Packing Gland

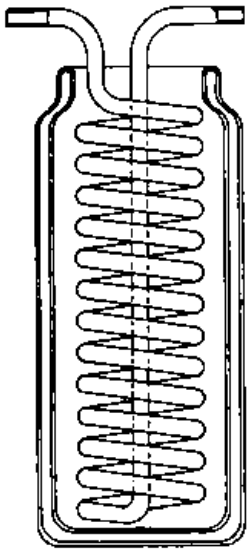

COLD TRAP

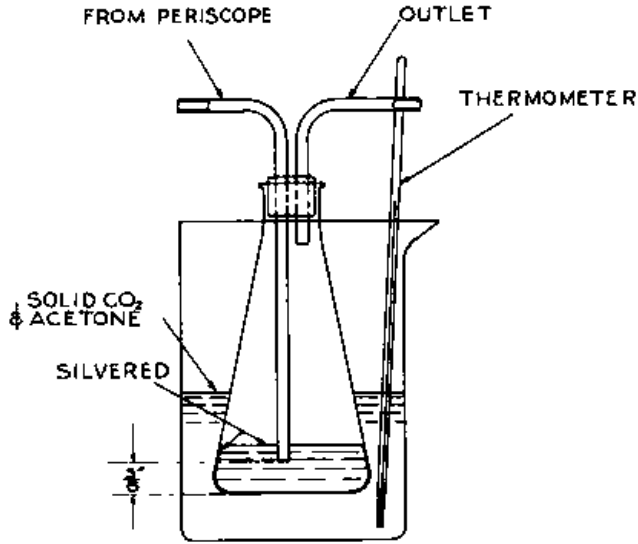

DEW POINT TESTER

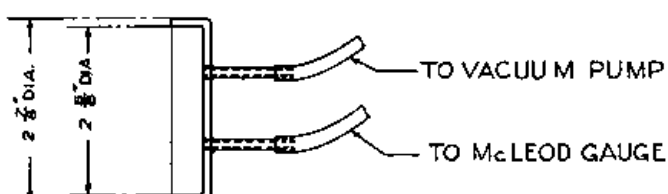

FIXTURE FOR DRYING INPUT ASSEMBLY

PLATE VI—Apparatus for Drying Periscope